# PAYSON CITY STANDARD PLAN SHEET INDEX

| PLAN # | TITLE | SHEETS | REVISED |
|---|---|---|---|
| | GENERAL | | |
| G-0 | PAYSON CITY STANDARD PLAN SHEET INDEX | 1 | APR 2022 |
| G-1 | PAYSON CITY STANDARD CONSTRUCTION NOTES | 2 | APR 2022 |
| G-2 | PROJECT CONTACT LIST | 1 | APR 2022 |
| | POWER | | |
| P-1 | OVERHEAD SERVICES - 200 AMP MAX - SINGLE PHASE AND THREE PHASE | 1 | APR 2022 |
| P-2 | UNDERGROUND SERVICES - 200 AMP MAX - SINGLE PHASE AND THREE PHASE | 3 | APR 2022 |
| P-3 | UNDERGROUND SERVICES - ABOVE 200 AMP - MULTIPLE METERED UNITS | 2 | APR 2022 |
| P-4 | UNDERGROUND SERVICES - ABOVE 200 AMP - DEDICATED TRANSFORMER | 1 | APR 2022 |
| P-5 | UNDERGROUND SERVICES - ABOVE 200 AMP - SINGLE METER SECONDARY SERVICE | 1 | APR 2022 |
| P-6 | CONCRETE TRANSFORMER PAD - THREE PHASE TRANSFORMER | 3 | APR 2022 |
| P-7 | PAD SWITCH SLEEVE | 1 | APR 2022 |
| P-8 | STREET LIGHT POLE AND BASE DETAIL | 1 | APR 2022 |
| | STREET | | |
| ST-1 | STANDARD STREET CROSS SECTION | 1 | APR 2022 |
| ST-2 | STANDARD PLOT PLAN | 1 | APR 2022 |
| ST-3 | CORNER PEDESTRIAN RAMP | 4 | APR 2022 |
| ST-4 | PAVEMENT RESTORATION | 2 | APR 2022 |
| ST-5 | STREET NAME SIGN AND POST DETAIL | 1 | APR 2022 |
| | STORM DRAIN | | |
| SD-1 | PRE-TREATMENT STRUCTURE AND SUMP DETAIL | 1 | APR 2022 |
| SD-2 | STORM AND SANITARY SEWER PIPE TRENCH | 1 | APR 2022 |
| SD-3 | CONCRETE COLLAR DETAIL | 1 | APR 2022 |
| SD-4 | DETENTION / RETENTION BASIN DETAIL | 1 | APR 2022 |
| | SANITARY SEWER | | |
| SS-1 | PRECAST SANITARY SEWER MANHOLE | 2 | APR 2022 |
| SS-2 | RECONSTRUCT BRICK MANHOLE | 1 | APR 2022 |
| SS-3 | SEWER LATERAL CONNECTION | 2 | APR 2022 |
| SS-4 | DROP MANHOLE SECTION | 1 | APR 2022 |
| | WATER | | |
| W-1 | FIRE HYDRANT LOCATION AND 6' x 6' CONCRETE APRON | 1 | APR 2022 |
| W-2 | 1" PRESSURIZED IRRIGATION METER AND SERVICE | 2 | APR 2022 |
| W-3 | 1-1/2" AND 2" PRESSURIZED IRRIGATION METER AND SERVICE | 1 | APR 2022 |
| W-4 | 1" DRINKING WATER METER AND SERVICE | 1 | APR 2022 |
| W-5 | 1-1/2" AND 2" DRINKING WATER METER AND SERVICE | 1 | APR 2022 |
| W-6 | WATER MAIN PIPE TRENCH | 1 | APR 2022 |
| W-7 | BACKFLOW PREVENTION ASSEMBLY - 1" THRU 3" PIPE SIZES | 1 | APR 2022 |

## GENERAL NOTES

1. ALL CONSTRUCTION TO CONFORM TO PROJECT'S CURRENT SPECIFICATIONS AND DETAILS. THE SPECIFICATIONS ORDER OF PRIORITY IS: CONSTRUCTION DRAWINGS, SPECIAL PROVISIONS, PAYSON CITY STANDARD PLANS, APWA STANDARDS, AND SUMMARY.

2. EXISTING UTILITIES ARE SHOWN BASED ON BEST INFORMATION AVAILABLE AT THE TIME OF DESIGN. PAYSON CITY IS NOT RESPONSIBLE FOR INACCURACIES IN THE LOCATIONS OR SIZE OF UTILITY SHOWN. NOTIFY BLUE STAKES (811) PRIOR TO ANY EXCAVATION.

3. PROTECT ALL EXISTING UTILITIES (WATER, FIBER OPTIC, AND DRAINAGE SERVICES AND ACCESS ROADS, ETC.) DURING CONSTRUCTION AND ENSURE THEY REMAIN IN PLACE AND OPERATIONAL (UNLESS OTHERWISE NOTIFIED BY PROPERTY OWNER). DEPTHS OF DRY UTILITIES ARE APPROXIMATE. POTHOLE TO ASSESS LOCATION OF UTILITIES.

4. IDENTIFY DAMAGED ITEMS WITHIN THE CONSTRUCTION BOUNDARIES PRIOR TO BEGINNING CONSTRUCTION. REPLACE ANY ITEM DAMAGED, NOT IDENTIFIED PRIOR TO BEGINNING CONSTRUCTION, AT NO COST TO THE CITY. PROVIDE VIDEO OF THE SITE BEFORE CONSTRUCTION.

5. MAINTAIN SAFE CONSTRUCTION PROCEDURES AND WORKING CLEARANCES AT ALL TIMES WHILE WORKING NEAR POWER LINES. FOLLOW ALL APPLICABLE OSHA STANDARDS. PROPER SIGNAGE IS REQUIRED AT CONTRACTOR'S EXPENSE.

6. VERIFY ALL DIMENSIONS BEFORE STARTING WORK. IMMEDIATELY NOTIFY THE ENGINEER IN WRITING OF ANY DISCREPANCIES.

7. UNLESS DETAILED, SPECIFIED, OR OTHERWISE INDICATED ON THE DRAWINGS, CONSTRUCTION REQUIREMENTS ARE IN THE APPLICABLE TYPICAL DETAILS AND GENERAL NOTES. TYPICAL DETAILS APPLY EVEN WHEN NOT REFERENCED AT SPECIFIC LOCATIONS ON THE DRAWINGS.

8. CONSULT WITH THE ENGINEER WHERE NO CONSTRUCTION DETAILS ARE SHOWN OR NOTED FOR ANY PART OF WORK.

9. PRESERVE AND PROTECT ALL SURVEY MONUMENTS. CONTACT COUNTY SURVEYORS OFFICE TO RESET SURVEY MONUMENTS TO FINISH GRADE.

10. PRESERVE, RESTORE, OR REPLACE ALL EXISTING FENCES, ROADS, DRIVE APPROACHES, CULVERTS, MAIL BOXES, LANDSCAPING, EROSION CONTROL BLANKETS, DITCHES, SIGNS, K-RAIL, ETC. TO PRE-CONSTRUCTION CONDITION.

11. NOTIFY AT LEAST 48 HOURS IN ADVANCE THE CITY CONSTRUCTION INSPECTOR, THE FIRE CHIEF AND THE POLICE CHIEF OF ANY ROAD CLOSURES THAT HAVE BEEN APPROVED BY THE CITY ENGINEER RELATING TO THE PROJECT. A SIGNED AND APPROVED ROAD CLOSURE PERMIT IS REQUIRED.

12. REQUEST ANY CHANGES TO THE PLANS IN WRITING TO THE CITY ENGINEER FOR APPROVAL PRIOR TO MAKING THE CHANGES. DESIGN CHANGE REQUESTS MUST BE STAMPED BY THE PROJECT ENGINEER.

13. DO NOT PERFORM ANY WORK NEAR UTILITY LINES WITHOUT FIRST CONTACTING THE RELATED UTILITY COMPANY AND ALLOWING A REPRESENTATIVE OF THE RELATED UTILITY COMPANY TO OBSERVE THE WORK IF REQUESTED.

## RIGHT-OF-WAY NOTES

14. SUBMIT FOR ACCEPTANCE TO CITY ENGINEER A TRAFFIC CONTROL PLAN FOR THE PROJECT'S TRAFFIC MAINTENANCE THAT MEETS MUTCD STANDARDS.

15. PROTECT EXISTING ASPHALT FROM CONSTRUCTION EQUIPMENT DAMAGE. REPLACE DAMAGED PAVEMENT AT THE DIRECTION OF THE PUBLIC WORKS DIRECTOR OR DESIGNEE.

16. DO NOT TRESPASS PRIVATE PROPERTY ALONG THE PROJECT. SECURE ACCESS IN WRITING FROM OWNERS TO PROPERTIES, RESIDENCES AND BUSINESSES DURING CONSTRUCTION. MAINTAIN TRAFFIC TO LOCAL RESIDENTS AT ALL TIMES.

## STORMWATER NOTES

1. LENGTHS SHOWN ON PLAN SHEETS ARE HORIZONTAL.
2. ALL PIPE IN THE PAYSON CITY RIGHT-OF-WAY TO BE REINFORCED CONCRETE OR POLYVINYL CHLORIDE PIPE. HIGH DENSITY POLYETHYLENE PIPE IS NOT PERMITTED.
3. PROVIDE UPDES SWPP PERMIT AND NOI PRIOR TO PRE-CONSTRUCTION MEETING. KEEP THE PERMIT ON THE PROJECT FOR REVIEW.
4. ALL SWPP BMPS TO BE IN PLACE AND APPROVED PRIOR TO START OF CONSTRUCTION.
5. SWPP BMPS TO BE REMOVED AND STORM DRAIN TO BE CLEANED AND CCTV INSPECTION PERFORMED BY A THIRD PARTY PRIOR TO FINAL ACCEPTANCE.
6. STORM PIPE TO BE INSPECTED AND SURVEYED PRIOR TO BACKFILL. NOTIFY CITY 48 HOURS IN ADVANCE OF ANY REQUIRED INSPECTION.

## SANITARY SEWER NOTES

7. SEWER PIPE TO BE INSPECTED AND SURVEYED PRIOR TO BACKFILL. NOTIFY CITY 48 HOURS IN ADVANCE OF ANY REQUIRED INSPECTION.
8. DROP MANHOLES ARE NOT PERMITTED WITHOUT PRIOR APPROVAL FROM THE CITY ENGINEER.
9. ALL SEWER PIPE TO BE GREEN SDR35 PVC PIPE. CORROSION RESISTANT PIPES AND MANHOLES ARE REQUIRED ON ALL LINES WITH HIGH HYDROGEN SULFIDE CONTENT OR AT THE DISCRETION OF THE PUBLIC WORKS DIRECTOR OR DESIGNEE.
10. COUPLINGS TO BE DOUBLE BAND, SHIELDED ADJUSTABLE REPAIR COUPLINGS IN COMPLIANCE WITH ASTM C 1173. NO CAST IRON FITTINGS PERMITTED.
11. INSTALL CONCRETE COLLAR FLUSH WITH MANHOLE RIM. CONCRETE COLLAR TO BE 1/4" BELOW PAVEMENT. SLOPE COLLAR FROM OUTSIDE EDGE TOWARDS THE MIDDLE TO THE RING AND COVER.
12. ALL SEWER TO BE CLEANED, AIR TESTED, AND CCTV INSPECTION PERFORMED BY A THIRD PARTY PRIOR TO FINAL ACCEPTANCE.
13. DURING CLEANING, BLOCK CONNECTION TO EXISTING CITY SEWER SYSTEM TO PREVENT DEBRIS FROM ENTERING THE SYSTEM.

## WATER AND PRESSURIZED IRRIGATION NOTES

14. ALL PIPE TO BE DR18 PVC PIPE MEETING AWWA C900 SPECIFICATIONS. DRINKING WATER LINES TO BE BLUE, PRESSURIZED IRRIGATION LINES TO BE PURPLE.
15. SERVICE LATERALS TO BE 1" MINIMUM CTS POLY PIPE. DRINKING WATER SERVICES TO BE BLUE, PRESSURIZED IRRIGATION SERVICES TO BE PURPLE.
16. ALL WATER LINES TO BE INSPECTED AND SURVEYED PRIOR TO BACKFILL. NOTIFY CITY 48 HOURS IN ADVANCE OF ANY REQUIRED INSPECTION.
17. TRACER WIRE REQUIRED ALONG ALL PIPES AND LATERALS 2" DIAMETER OR GREATER. TAPE TRACER WIRE TO PIPE BELLS. CONTINUITY TO BE TESTED AND APPROVED PRIOR TO FINAL ACCEPTANCE. ANY ISSUES WITH TRACER WIRE CONTINUITY WILL BE REPAIRED AT CONTRACTOR'S EXPENSE.
18. TRACER WIRE AT VALVES SHALL BE BROUGHT NEAR SURFACE ON THE OUTSIDE OF VALVE BOX. NOTCH A HOLE ON THE UPPER SLEEVE AND FEED TRACER WIRE INTO VALVE BOX.
19. ALL METAL FIXTURES AND APPURTENANCES MUST BE WRAPPED IN 20 MIL BLACK POLYWRAP.

## ELECTRICAL NOTES

20. ALL WORK AND MATERIALS TO CONFORM TO NATIONAL ELECTRIC CODE AND PAYSON CITY STANDARDS.
21. ALL POWER CONDUITS TO BE GRAY SCH 40 PVC OR APPROVED EQUAL.
22. NO OTHER UTILITY IS PERMITTED IN GRAY CONDUIT.
23. COORDINATE ALL ELECTRICAL WORK WITH PAYSON CITY POWER.

| PAYSON CITY CONTACTS | | | |
|---|---|---|---|
| COMPANY / DEPARTMENT | NAME | TITLE | PHONE |
| DEVELOPMENT SERVICES | JILL SPENCER | CITY PLANNER | 801-465-5233 |
| DEVELOPMENT SERVICES | JON SNELGROVE | BUILDING INSPECTOR | 801-465-5129 |
| DEVELOPMENT SERVICES | MARTY DARGEL | DEVELOPMENT SERVICES EXECUTIVE ASSISTANT | 801-465-5214 |
| DEVELOPMENT SERVICES | ROBERT MILLS | DEVELOPMENT SERVICES DIRECTOR | 801-465-5268 |
| ENGINEERING | JOE JAMISON | GIS ADMINISTRATOR | 801-465-5266 |
| ENGINEERING | JONATHAN KNIGHT | DEVELOPMENT ENGINEER | 385-895-8410 |
| ENGINEERING | TRAVIS JOCKUMSEN | PW DIRECTOR / CITY ENGINEER | 801-465-5235 |
| FIRE | SCOTT SPENCER | FIRE CHIEF | 801-465-5251 |
| POLICE | BRAD BISHOP | POLICE CHIEF | 801-465-5240 |
| POWER | BRAD KEARL | ELECTRICAL DISTRIBUTION SUPERINTENDENT | 801-465-5270 |
| POWER | BRIAN STEVENSON | POWER PLANT SUPERINTENDENT | 801-465-5274 |
| PUBLIC WORKS | DEBBIE BUSHNELL | PUBLIC WORKS EXECUTIVE ASSISTANT | 801-465-5217 |
| PUBLIC WORKS | KYLE ANDERSON | PUBLIC WORKS INSPECTOR | 801-465-5217 |
| SEWER | JEFF HIATT | SEWER SYSTEM SUPERINTENDENT | 801-465-5277 |
| SEWER | TYLER LOWE | TREATMENT PLANT OPERATOR | 801-465-5277 |
| STORM DRAIN | JESSE SMITH | SWPP INSPECTOR | 801-465-5230 |
| STREETS | KENT FOWDEN | STREETS/STORMWATER SUPERINTENDENT | 801-465-5230 |
| WATER | CAMERON PHILLIPS | WATER SYSTEM SUPERINTENDENT | 801-465-5278 |
| PRIVATE UTILITY CONTACTS | | | |
| CENTURY LINK | BILL WESTFALL | ENGINEER | 435-660-0923 |
| COMCAST | ELYSIA VALDEZ | COORDINATOR | 801-201-0177 |
| DOMINION ENERGY | DAVE CHRISTENSEN | PRE-CONSTRUCTION REP | 801-853-6586 |
| SALEM CANAL IRRIGATION CO | CODY HORTON | WATER MASTER | 801-362-5548 |
| STRAWBERRY HIGH LINE CANAL | MARTY LARSON | GENERAL MANAGER | 801-465-4824 |
| UTOPIA | KEITH PERKINS | CONSTRUCTION MANAGER | 801-613-3863 |
| MISCELLANEOUS CONTACTS | | | |
| NEBO SCHOOL DISTRICT | MATT GLEDHILL | DIRECTOR OF OPERATIONS | 801-354-7433 |
| PAYSON POST OFFICE | RON MENDELL | POSTMASTER | 801-465-1457 |

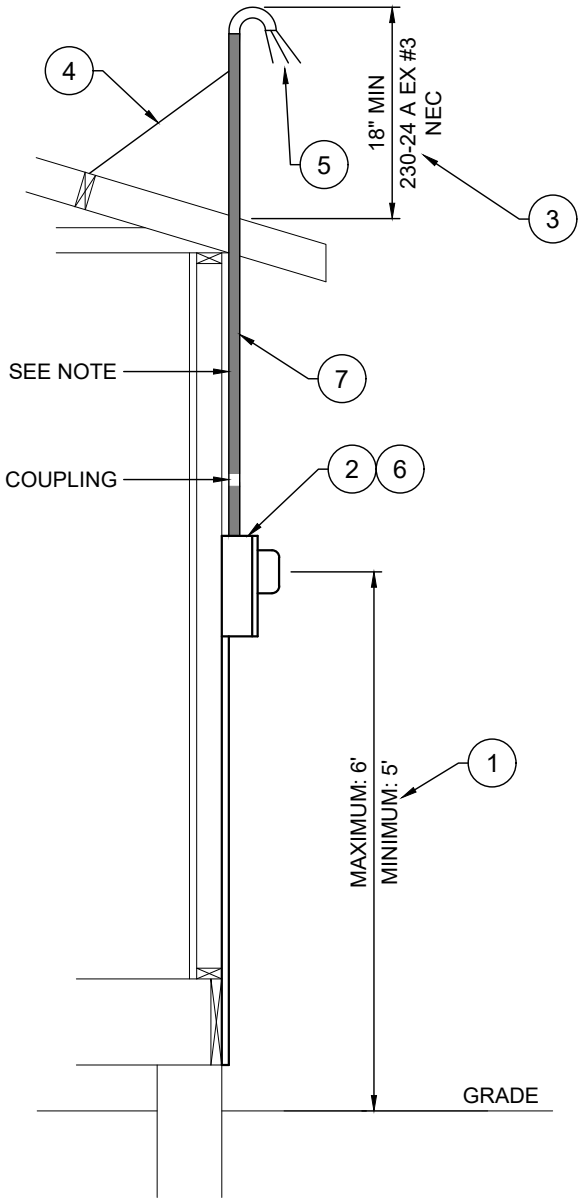


SURFACE MOUNT

NOTES:

1. HEIGHT OF METER 5'-6" AND NOT TO EXCEED 6', AND NOT LOWER THAN 5'.
2. METER BASE FURNISHED AND INSTALL BY THE CONTRACTOR. (A MANUAL BYPASS IS REQUIRED ON 3 PHASE).
3. STANDPIPE SHALL BE A MINIMUM 2" RIGID METALLIC, OR IMC, AND EXTEND ABOVE ROOF A MINIMUM OF 18" AS OF NEC 230-24.
4. BRIDAL GUY TO BE INSTALLED IF NECESSARY.
5. CONDUCTORS FURNISHED AND INSTALLED BY CONTRACTOR TO EXTEND 18" FROM THE WEATHER HEAD AND SHALL COMPLY WITH THE NATIONAL ELECTRIC CODE.
   - 100 AMP 1/0 URD
   - 125 AMP 1/0 URD
   - 150 AMP 2/0 URD
   - 200 AMP 4/0 URD

   OXIDE INHIBITING COMPOUND SHALL BE USED ON ALL ALUMINUM CONNECTIONS.
6. ALL METAL TERMINATIONS SHALL HAVE BUSHINGS OR METER BASE HUB.
7. PAYSON CITY POWER WILL FURNISH AND INSTALL METERS.
8. MIN. CONDUIT SIZES:
   - 2" - CONDUIT FOR 100 AMP SERVICE.
   - 2" - CONDUIT FOR 200 AMP SERVICE.
   - 3" - CONDUIT FOR 3 PHASE, 200 AMP SERVICE.
9. ALL SHADED AREA WILL BE RIGID METALLIC CONDUIT OR IMC.
10. NO COUPLING WITHIN 10' OF WEATHER HEAD.
11. (2) 5/8" X 8' COPPER CLAD GROUND RODS SPACED 8' APART SHALL BE USED WITH A MINIMUM OF #6 COPPER CONNECTING TO THE METER BASE. METER BASE TO BE TIED TO UFER WHERE APPLICABLE.

| | | | |
|---|---|---|---|
| PAYSON UTAH<br>APRIL 2022 | OVERHEAD SERVICES - 200 AMP MAX<br>(SINGLE PHASE AND THREE PHASE) | STANDARD PLAN<br>P-1 | SHEET<br>1 OF 1 |

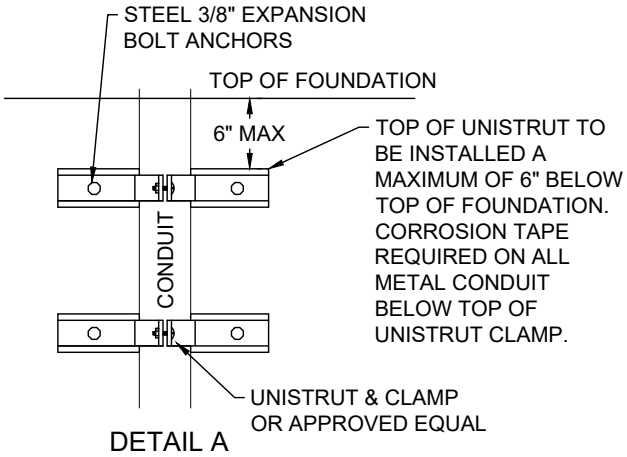


DETAIL A

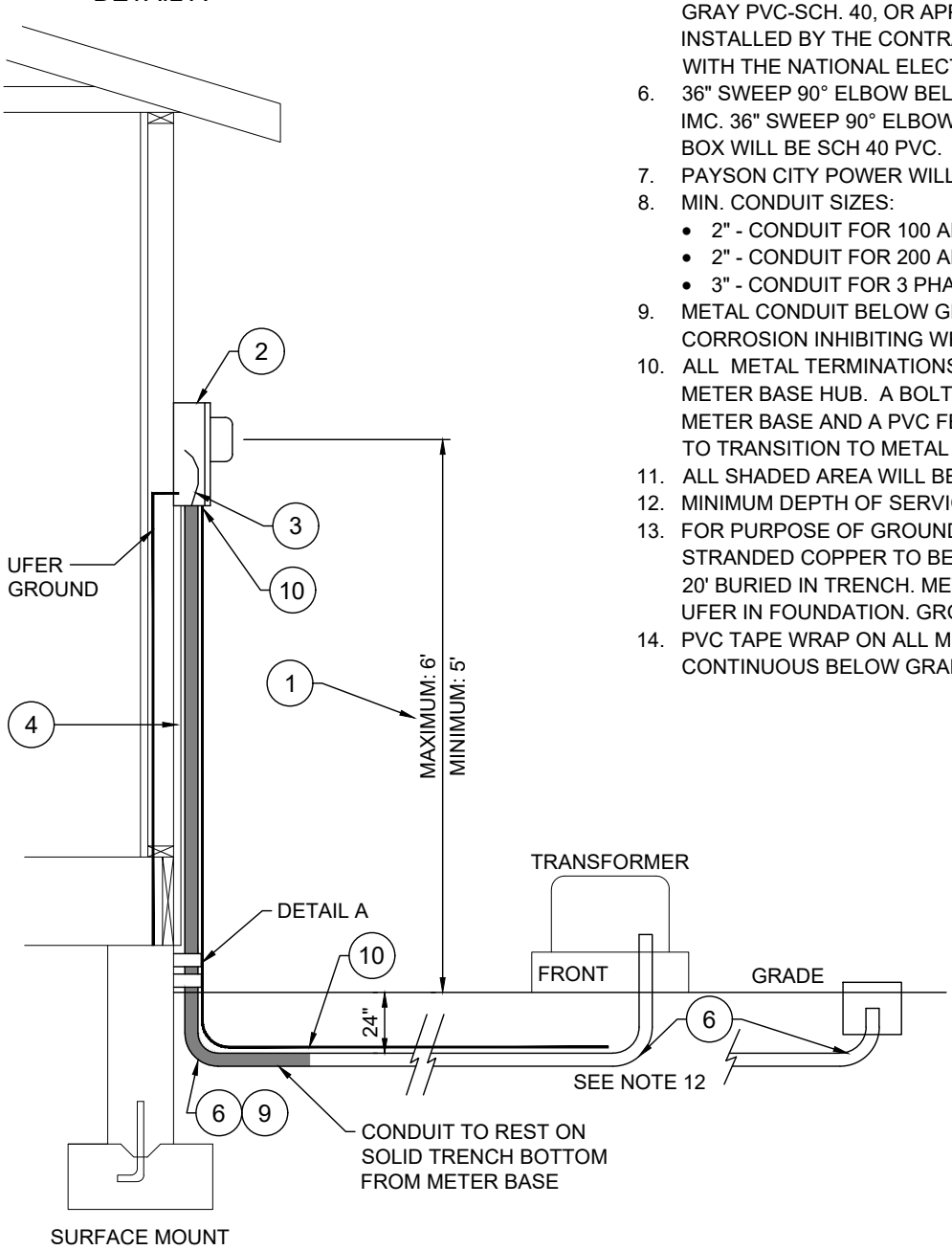


NOTES:

1. HEIGHT OF METER 5'6" AND NOT TO EXCEED 6', AND NOT LOWER THAN 5'.
2. METER BASE FURNISHED AND INSTALL BY THE CONTRACTOR. (A MANUAL BYPASS IS REQUIRED ON 3 PHASE).
3. MINIMUM SIZE SERVICE WIRE PROVIDED BY CONTRACTOR.
   - 100 AMP 1/0 URD
   - 125 AMP 1/0 URD
   - 150 AMP 2/0 URD
   - 200 AMP 4/0 URD

   OXIDE INHIBITING COMPOUND SHALL BE USED ON ALL ALUMINUM CONNECTIONS.
4. CONDUIT TO BE RIGID METALLIC OR IMC FROM GROUND TO METER BASE, (MIN 2") FURNISHED AND INSTALLED BY CONTRACTOR.
5. CONDUIT FROM BUILDING TO CONNECTION POINT WILL BE GRAY PVC-SCH. 40, OR APPROVED EQUAL, FURNISHED AND INSTALLED BY THE CONTRACTOR. CONDUIT WILL COMPLY WITH THE NATIONAL ELECTRIC CODE.
6. 36" SWEEP 90° ELBOW BELOW METER BASE WILL BE RIGID OR IMC. 36" SWEEP 90° ELBOW AT SECONDARY CONNECTION BOX WILL BE SCH 40 PVC.
7. PAYSON CITY POWER WILL FURNISH AND INSTALL METERS.
8. MIN. CONDUIT SIZES:
   - 2" - CONDUIT FOR 100 AMP SERVICE.
   - 2" - CONDUIT FOR 200 AMP SERVICE.
   - 3" - CONDUIT FOR 3 PHASE, 200 AMP SERVICE.
9. METAL CONDUIT BELOW GRADE WILL BE PROTECTED BY A CORROSION INHIBITING WRAP. (10 MILL. PVC PIPE WRAP)
10. ALL METAL TERMINATIONS SHALL HAVE BUSHINGS OR METER BASE HUB. A BOLT ON HUB SHALL BE USED AT THE METER BASE AND A PVC FEMALE ADAPTOR SHALL BE USED TO TRANSITION TO METAL CONDUIT.
11. ALL SHADED AREA WILL BE RIGID METALLIC CONDUIT OR IMC.
12. MINIMUM DEPTH OF SERVICE TRENCH TO BE 24".
13. FOR PURPOSE OF GROUNDING, A MINIMUM OF #2 BARE STRANDED COPPER TO BE INSTALLED WITH A MINIMUM OF 20' BURIED IN TRENCH. METER BASE SHALL ALSO BE TIED TO UFER IN FOUNDATION. GROUNDING TO MEET NEC.
14. PVC TAPE WRAP ON ALL METAL PIPE BELOW CLAMP, CONTINUOUS BELOW GRADE TO PVC PIPE.

| | | | |
|---|---|---|---|
| PAYSON UTAH<br>APRIL 2022 | UNDERGROUND SERVICES - 200 AMP MAX<br>(SINGLE PHASE AND THREE PHASE) | STANDARD PLAN<br>P-2 | SHEET<br>1 OF 3 |

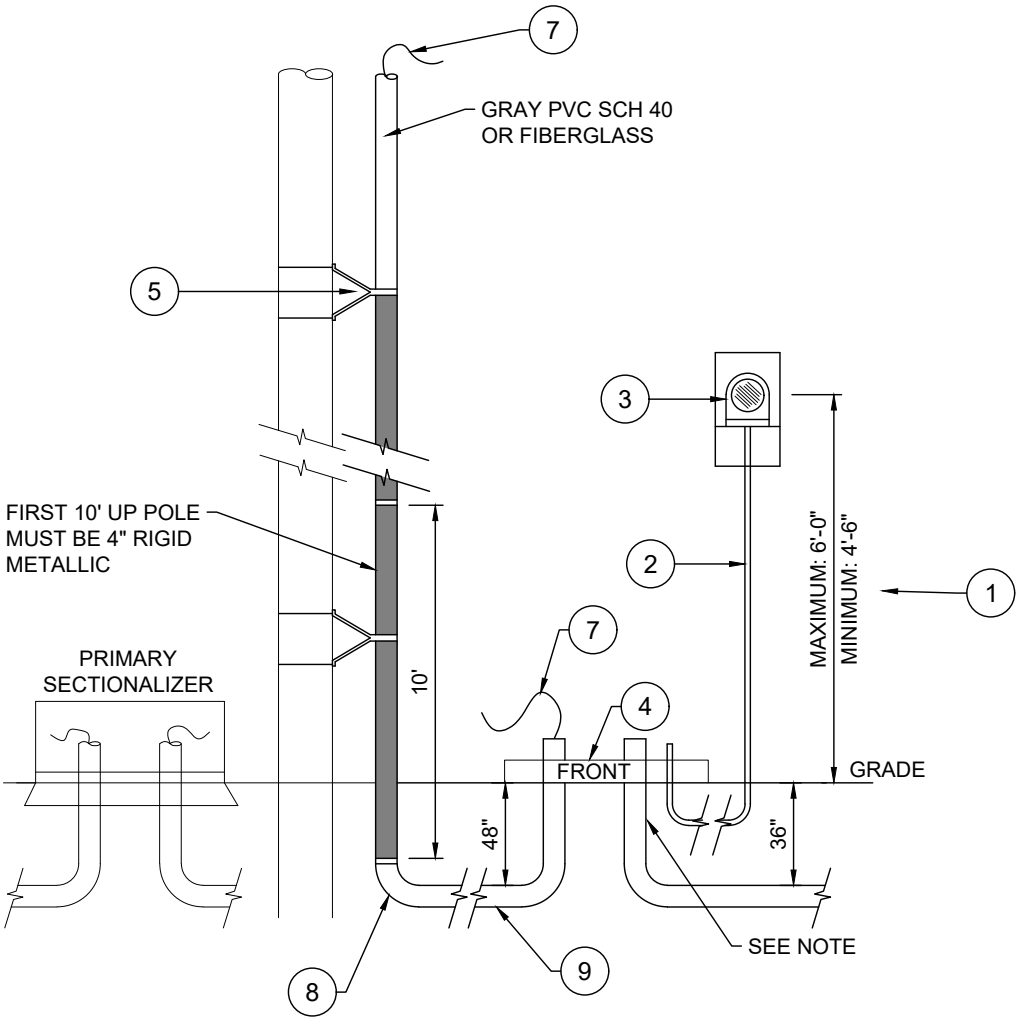


NOTES:

1. HEIGHT OF METER NOT TO EXCEED 6', AND NOT LOWER THAN 4'-6".
2. METERING CONDUIT: METALLIC 1" RIGID CONDUIT. TO BE LOCATED NEAR THE FRONT OF PAD SECONDARY OPENING AND HAVE GROUND WIRE AND BUSHING ATTACHED. ALL TO BE FURNISHED AND INSTALLED BY THE CONTRACTOR.
3. METER SOCKET: FURNISHED AND INSTALLED BY PAYSON CITY POWER. CALL 801-465-5270 FOR MOUNTING INFORMATION.
4. PAD OR VAULT FLOOR: FURNISHED AND INSTALLED BY CONTRACTOR.
5. CONDUIT FROM BUILDING TO CONNECTION POINT WILL BE GRAY PVC SCH 40 OR APPROVED EQUAL, FURNISHED AND INSTALLED BY THE CONTRACTOR. CONDUIT WILL COMPLY WITH THE NATIONAL ELECTRIC CODE.
6. 36" SWEEP 90° ELBOW BELOW METER BASE WILL BE RIGID OR IMC. 36" SWEEP 90° ELBOW AT SECONDARY CONNECTION BOX WILL BE SCH 40 PVC.
7. PAYSON CITY POWER WILL FURNISH AND INSTALL METERS.
8. MIN. CONDUIT SIZES:
   - 2" - CONDUIT FOR 100 AMP SERVICE
   - 2" - CONDUIT FOR 200 AMP SERVICE
   - 3" - CONDUIT FOR 3 PHASE, 200 AMP SERVICE
9. ALL SHADED AREA WILL BE RIGID METALLIC CONDUIT.
10. MINIMUM DEPTH OF SERVICE TRENCH TO BE 24".
11. GROUNDING TO MEET NEC.

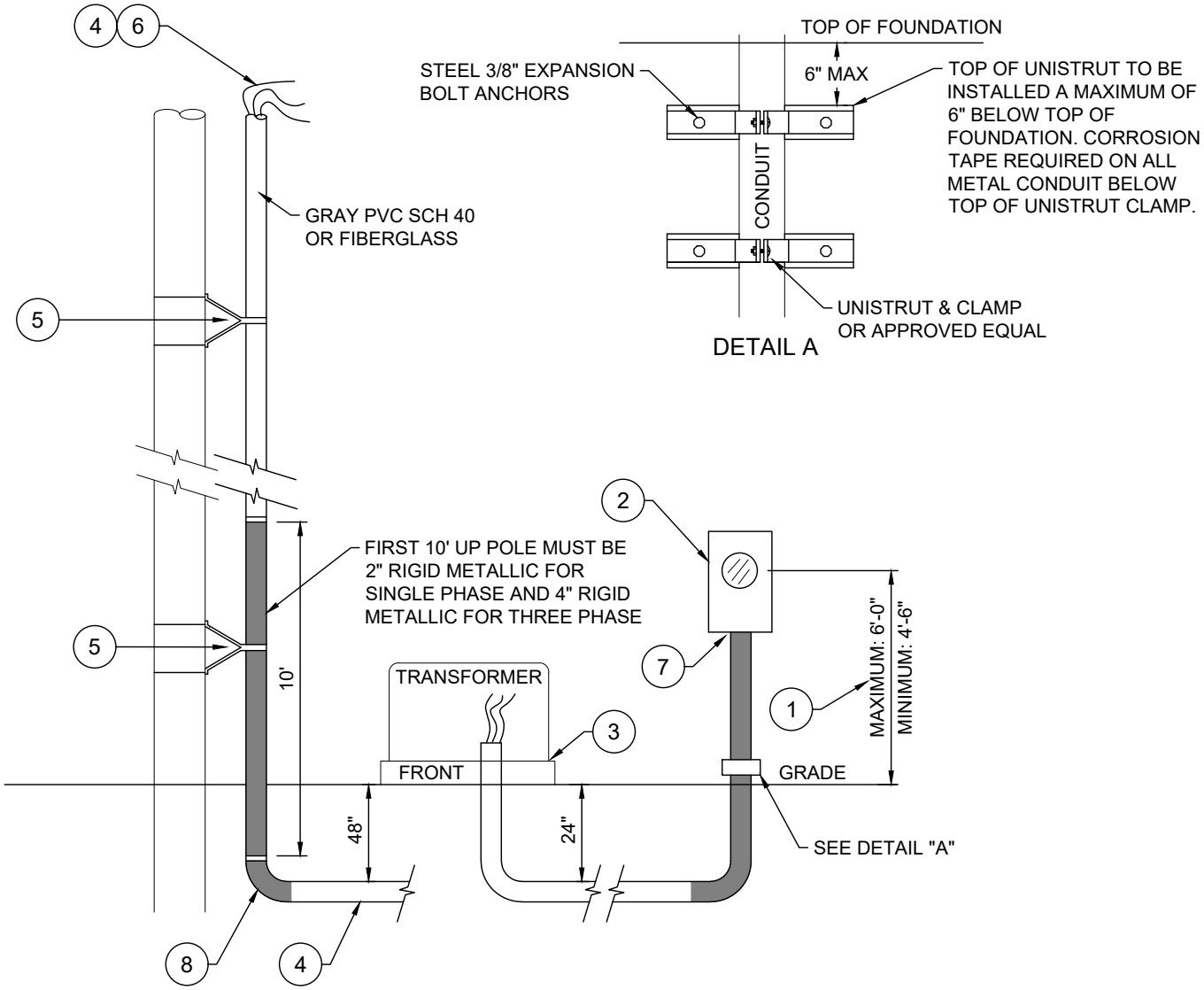


NOTES:

1. HEIGHT OF METER 5'-6" AND NOT TO EXCEED 6', AND NOT LOWER THAN 5'.
2. METER SOCKET TO BE FURNISHED AND INSTALLED BY THE CONTRACTOR.
3. PAD OR VAULT FLOOR FURNISHED AND INSTALLED BY CONTRACTOR TO GRADE.
4. SERVICE CONDUIT AND CONDUCTORS FURNISHED AND INSTALLED BY THE CONTRACTOR SHALL COMPLY WITH THE NATIONAL ELECTRICAL CODE.
5. CONTRACTOR TO FURNISH STAND-OFF BRACKETS, CLAMPS AND LAGS, MINIMUM OF ONE FOR EVERY TEN FOOT LENGTH OF CONDUIT.
6. CONTRACTOR TO FURNISH AND INSTALL 2500 LB MULE TAPE FOR PULLING IN PRIMARY CONDUCTORS WITH TEN FEET EXTENDING FROM EACH END.
7. ALL METAL TERMINATIONS SHALL HAVE BUSHINGS OR METER BASE HUB.
8. METAL CONDUIT BELOW GRADE WILL BE PROTECTED BY A CORROSION INHIBITING WRAP. (10 MILL PVC PIPE WRAP). ALL 90° ELBOWS WILL BE 36" SWEEPS.
9. SERVICE CONDUIT WILL MEET WESTERN UNDERGROUND COMMITEE SPEC.3.1. CONDUIT AND CONDUCTORS WILL COMPLY WITH NATIONAL ELECTRICAL CODE, AND BE FURNISHED AND INSTALLED BY CONTRACTOR.
10. ALL SHADED AREA WILL BE RIGID METALLIC CONDUIT.
11. MINIMUM DEPTH OF SERVICE TRENCH TO BE 24" (2 FEET) FROM TOP OF CONDUIT.
12. MINIMUM DEPTH OF TRENCH FOR PRIMARY LINE WILL BE 48" (4 FEET) FROM TOP OF CONDUIT.

| | | | |
|---|---|---|---|
| PAYSON UTAH<br>APRIL 2022 | UNDERGROUND SERVICES - 200 AMP MAX<br>(SINGLE PHASE AND THREE PHASE) | STANDARD PLAN<br>P-2 | SHEET<br>3 OF 3 |

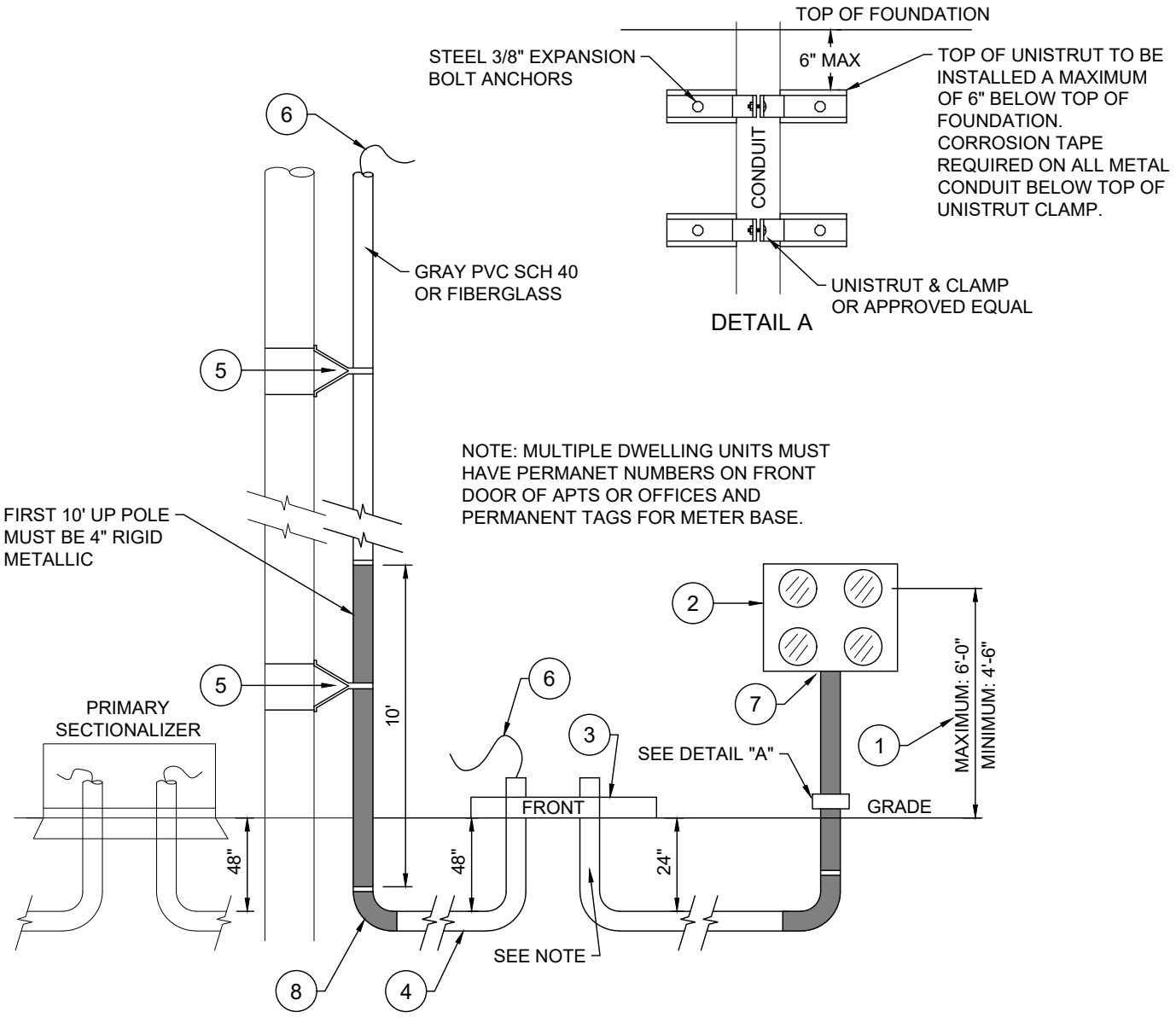


NOTES:

1. HEIGHT OF METER 5'-6" AND NOT TO EXCEED 6', AND NOT LOWER THAN 5'.
2. METER SOCKET TO BE FURNISHED AND INSTALLED BY THE CONTRACTOR.
3. PAD OR VAULT FLOOR FURNISHED AND INSTALLED BY CONTRACTOR TO GRADE.
4. PRIMARY CONDUIT: 4" GRAY PVC SCH 40 OR EQUAL AND MEET NEC. FURNISHED AND INSTALLED BY THE CONTRACTOR.
5. CONTRACTOR TO FURNISH STAND-OFF BRACKETS, CLAMPS AND LAGS, MINIMUM OF ONE FOR EVERY TEN FOOT LENGTH OF CONDUIT.
6. CONTRACTOR TO FURNISH AND INSTALL 2500 LB MULE TAPE FOR PULLING IN PRIMARY CONDUCTORS WITH TEN FEET EXTENDING FROM EACH END.
7. ALL METAL TERMINATIONS SHALL HAVE BUSHINGS OR METER BASE HUB.
8. METAL CONDUIT BELOW GRADE WILL BE PROTECTED BY A CORROSION INHIBITING WRAP. (10 MILL PVC PIPE WRAP). ALL 90° ELBOWS WILL BE 36" SWEEPS.
9. SERVICE CONDUIT WILL MEET WESTERN UNDERGROUND COMMITEE SPEC.3.1. CONDUIT AND CONDUCTORS WILL COMPLY WITH NATIONAL ELECTRICAL CODE, AND BE FURNISHED AND INSTALLED BY CONTRACTOR.
10. ALL SHADED AREA WILL BE RIGID METALLIC CONDUIT.
11. MINIMUM DEPTH OF SERVICE TRENCH TO BE 24" (2 FEET) FROM TOP OF CONDUIT.
12. MINIMUM DEPTH OF TRENCH FOR PRIMARY LINE WILL BE 48" (4 FEET) FROM TOP OF CONDUIT.

| | | | |
|---|---|---|---|
| PAYSON UTAH<br>APRIL 2022 | UNDERGROUND SERVICES - ABOVE 200 AMP<br>MULTIPLE METERED UNITS (SINGLE PHASE AND THREE PHASE) | STANDARD PLAN<br>P-3 | SHEET<br>1 OF 2 |

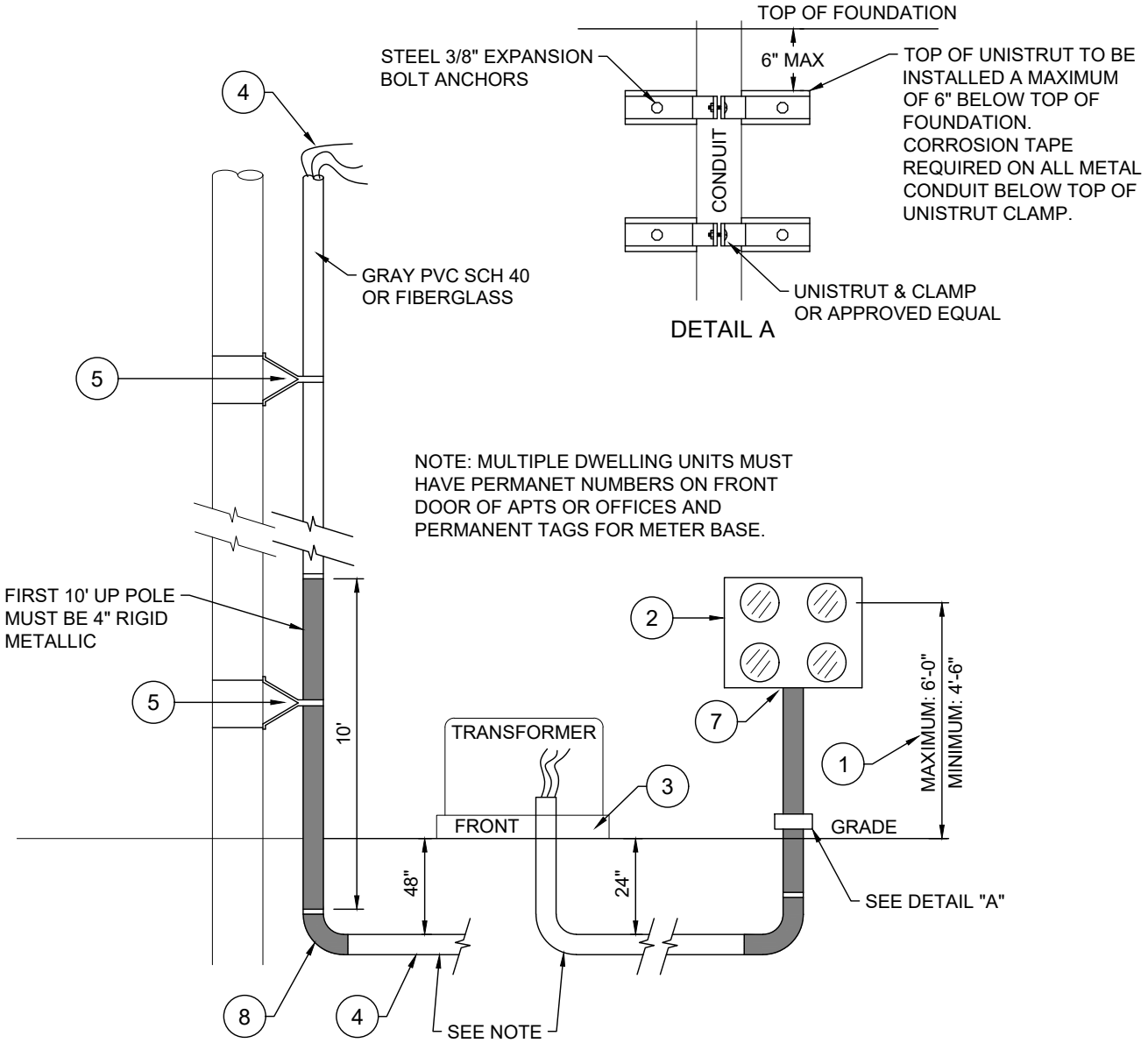


NOTES:

1. HEIGHT OF METER 5'-6" AND NOT TO EXCEED 6', AND NOT LOWER THAN 5'.
2. METER SOCKET TO BE FURNISHED AND INSTALLED BY THE CONTRACTOR.
3. PAD OR VAULT FLOOR FURNISHED AND INSTALLED BY CONTRACTOR TO GRADE.
4. SERVICE CONDUIT AND CONDUCTORS FURNISHED AND INSTALLED BY THE CONTRACTOR SHALL COMPLY WITH THE NATIONAL ELECTRICAL CODE AND UTILITY STANDARDS.
5. CONTRACTOR TO FURNISH STAND-OFF BRACKETS, CLAMPS AND LAGS, MINIMUM OF ONE FOR EVERY TEN FOOT LENGTH OF CONDUIT. CITY WILL BUILD RISER PAST THE 1ST 10 FEET.
6. CONTRACTOR TO FURNISH AND INSTALL 2500 LB MULE TAPE FOR PULLING IN PRIMARY CONDUCTORS WITH TEN FEET EXTENDING FROM EACH END.
7. ALL METAL TERMINATIONS SHALL HAVE BUSHINGS OR METER BASE HUB.
8. METAL CONDUIT BELOW GRADE WILL BE PROTECTED BY A CORROSION INHIBITING WRAP. (10 MILL PVC PIPE WRAP). ALL 90° ELBOWS WILL BE 36" SWEEPS.
9. SERVICE CONDUIT WILL MEET WESTERN UNDERGROUND COMMITEE SPEC.3.1. CONDUIT AND CONDUCTORS WILL COMPLY WITH NATIONAL ELECTRICAL CODE, AND BE FURNISHED AND INSTALLED BY CONTRACTOR.
10. ALL SHADED AREA WILL BE RIGID METALLIC CONDUIT.
11. MINIMUM DEPTH OF SERVICE TRENCH TO BE 24" (2 FEET) FROM TOP OF CONDUIT.
12. MINIMUM DEPTH OF TRENCH FOR PRIMARY LINE WILL BE 48" (4 FEET) FROM TOP OF CONDUIT.

| | | | |
|---|---|---|---|
| PAYSON UTAH<br>APRIL 2022 | UNDERGROUND SERVICES - ABOVE 200 AMP<br>MULTIPLE METERED UNITS (SINGLE PHASE AND THREE PHASE) | STANDARD PLAN<br>P-3 | SHEET<br>2 OF 2 |

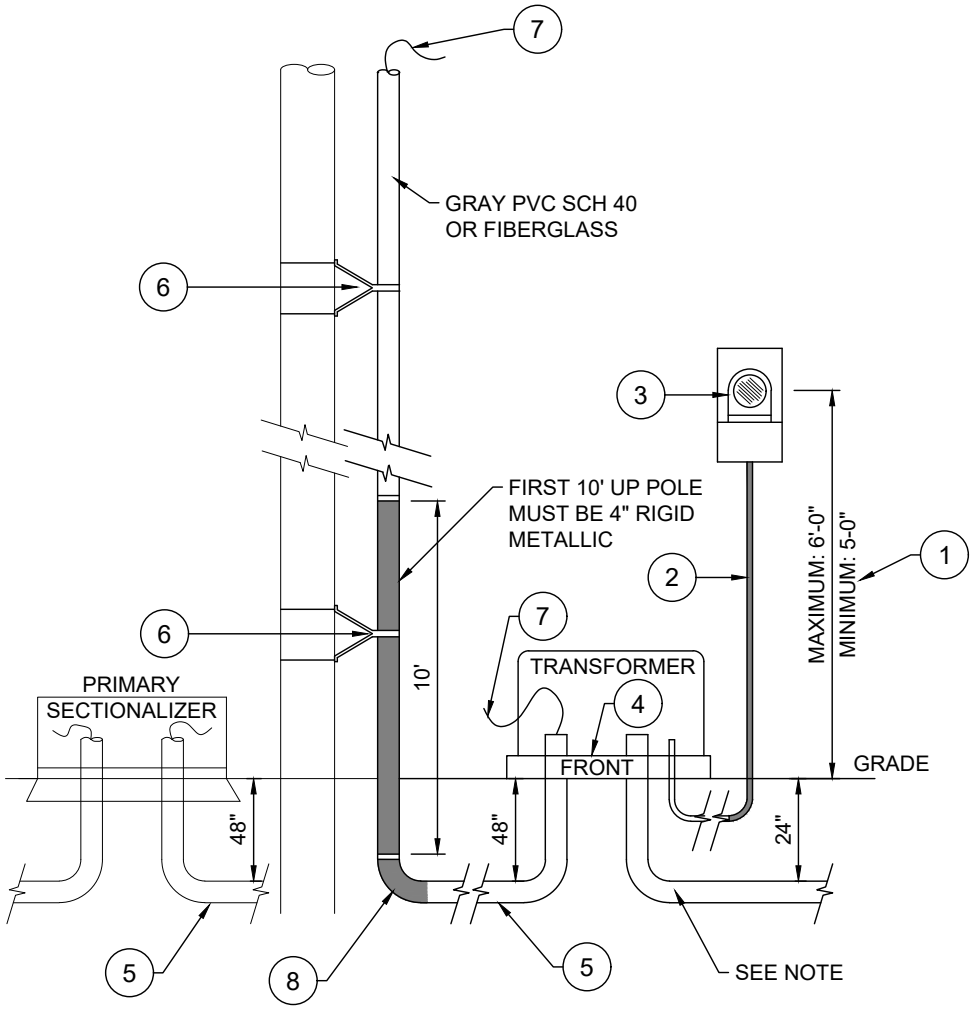


NOTES:

1. HEIGHT OF METER NOT TO EXCEED 6', AND NOT LOWER THAN 5'.
2. METERING CONDUIT: METALLIC 1" RIGID CONDUIT. TO BE LOCATED NEAR THE FRONT OF PAD SECONDARY OPENING AND HAVE GROUND WIRE AND BUSHING ATTACHED. ALL TO BE FURNISHED AND INSTALLED BY THE CONTRACTOR.
3. METER SOCKET: FURNISHED AND INSTALLED BY PAYSON CITY POWER. CALL 801-465-5274 FOR MOUNTING INFORMATION.
4. PAD OR VAULT FLOOR: FURNISHED AND INSTALLED BY CONTRACTOR.
5. PRIMARY CONDUIT: 2" FOR SINGLE PHASE AND 4" GRAY PVC SCH 40 FOR THREE PHASE, OR APPROVED EQUAL, AND MEET NEC. FURNISHED AND INSTALLED BY THE CONTRACTOR UNLESS OTHERWISE APPROVED BY UTILITY.
6. CONTRACTOR TO FURNISH STANDOFF BRACKETS, CLAMP AND LAGS. MINIMUM OF ONE FOR EVERY 10 FEET OF CONDUIT.
7. CONTRACTOR TO FURNISH AND INSTALL 2500 LB MULE TAPE FOR PULLING IN PRIMARY CONDUCTORS WITH TEN FEET EXTENDING FROM EACH END.
8. METAL CONDUIT BELOW GRADE WILL BE PROTECTED BY A CORROSION INHIBITING WRAP. ALL 90° ELBOWS WILL BE 36" SWEEPS.
9. ALL SHADED AREA WILL BE RIGID METALLIC CONDUIT.
10. MINIMUM DEPTH OF SERVICE TRENCH TO BE 24" (2 FEET) FROM THE TOP OF THE CONDUIT.
11. SERVICE CONDUIT AND CONDUCTORS FURNISHED AND INSTALLED BY THE CUSTOMER WILL COMPLY WITH THE NATIONAL ELECTRICAL CODE.
12. ALL METAL TERMINATIONS SHALL HAVE BUSHINGS OR METER BASE HUB.

| | | | |
|---|---|---|---|
| PAYSON UTAH<br>APRIL 2022 | UNDERGROUND SERVICES - ABOVE 200 AMP<br>DEDICATED TRANSFORMER (SINGLE PHASE AND THREE PHASE) | STANDARD PLAN<br>P-4 | SHEET<br>1 OF 1 |

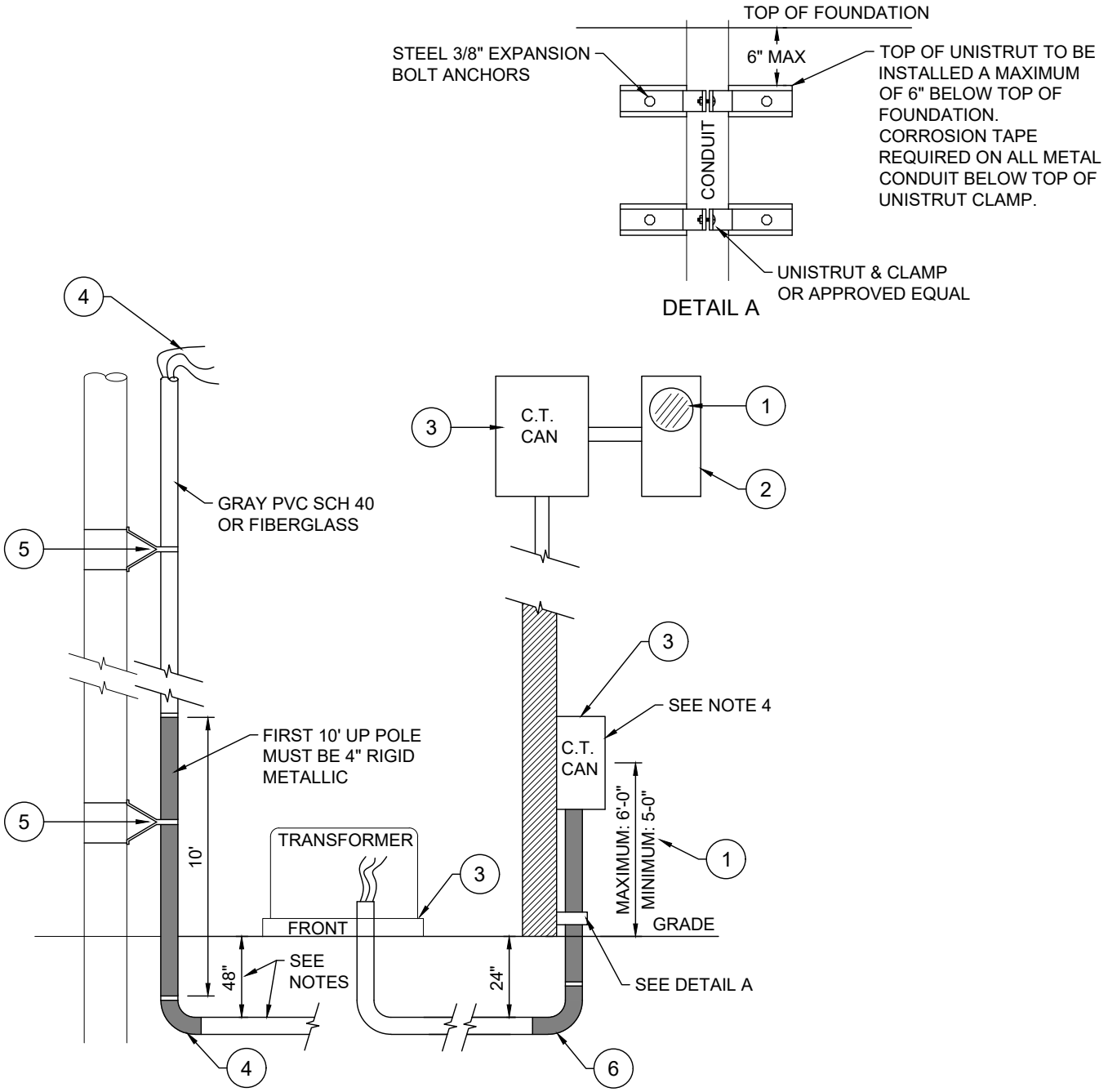


NOTES:

1. HEIGHT OF METER NOT TO EXCEED 6', AND NOT LOWER THAN 5'.
2. METER SOCKET TO BE FURNISHED AND INSTALLED BY PAYSON CITY POWER. CALL 801-465-5270 FOR MOUNTING INFORMATION.
3. C.T. CAN FURNISHED AND INSTALLED BY CONTRACTOR.
4. SERVICE CONDUIT AND CONDUCTORS FURNISHED AND INSTALLED BY THE CONTRACTOR SHALL COMPLY WITH THE NATIONAL ELECTRICAL CODE, AND UTILITY STANDARDS. ALL 90° BENDS WILL BE 36" SWEEPS.
5. CONTRACTOR TO FURNISH STAND-OFF BRACKETS, CLAMPS, LAGS AND UNISTRUT, 1-1/2" DEEP. INSTALL A MINIMUM OF ONE FOR EVERY TEN FOOT LENGTH OF CONDUIT.
6. METAL CONDUIT BELOW GRADE WILL BE PROTECTED BY A CORROSION INHIBITING WRAP. (10 MIL PVC WRAP)
7. SERVICE CONDUIT WILL MEET WESTERN UNDERGROUND COMMITTEE SPEC.3.1. CONDUIT AND CONDUCTORS WILL COMPLY WITH NATIONAL ELECTRICAL CODE, AND BE FURNISHED AND INSTALLED BY CONTRACTOR.
8. ALL SHADED AREA WILL BE RIGID METALLIC CONDUIT.
9. MINIMUM DEPTH OF SERVICE TRENCH TO BE 24" FROM THE TOP OF THE CONDUIT.
10. ALL METAL TERMINATIONS SHALL HAVE BUSHINGS OR METER HUB.

| PAYSON UTAH APRIL 2022 | UNDERGROUND SERVICES - ABOVE 200 AMP<br>SINGLE METER SECONDARY SERVICE (SINGLE PHASE) | STANDARD PLAN<br>P-5 | SHEET<br>1 OF 1 |
|---|---|---|---|

## ELEVATION

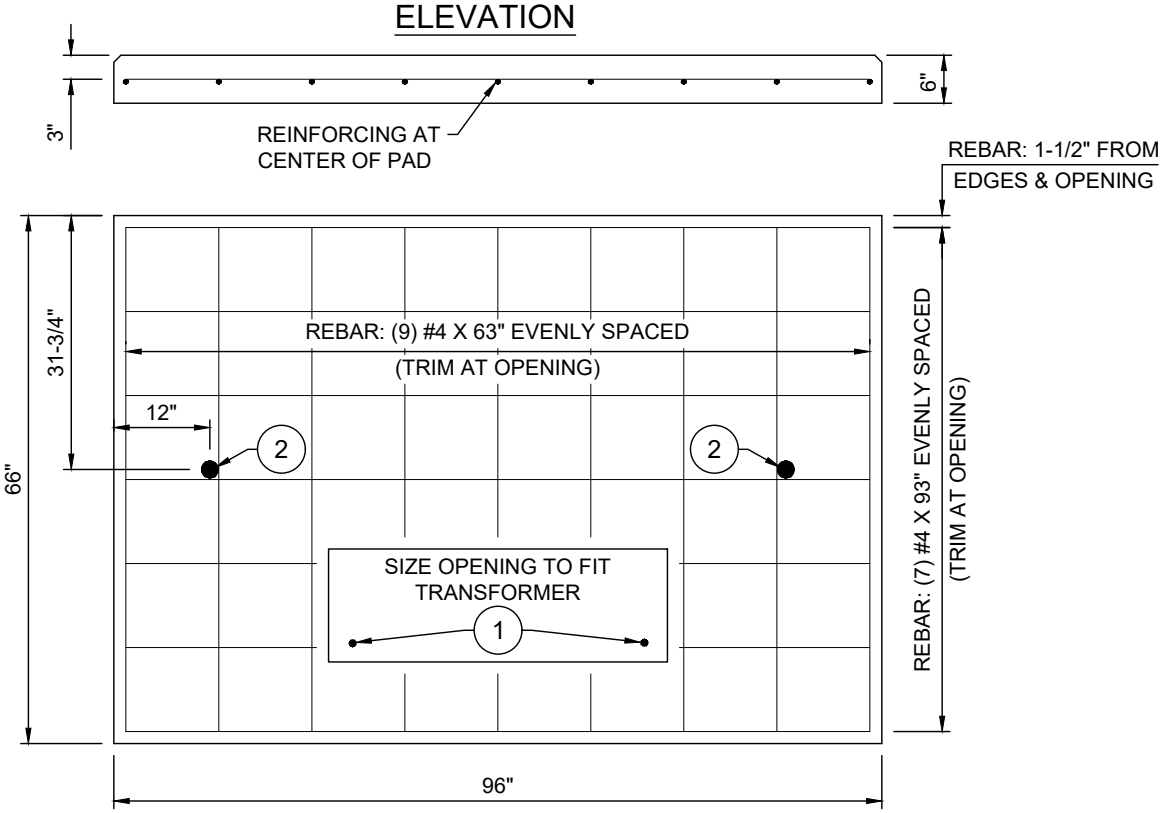


## PLAN VIEW

KEYED NOTES:

1. 5/8" X 8'-0" COPPER CLAD GROUND ROD
2. PAD ANCHOR (2 PLACES FOR PRECAST PAD)

NOTES:

1. PAD MAY BE PRECAST OR CAST-IN-PLACE
2. CONCRETE TO BE 4000 PSI MIN
3. CAST-IN-PLACE MIX MUST BE APPROVED PRIOR TO INSTALLATION
4. MIX SHOULD MEET APWA SPECIFICATIONS AT A MINIMUM
5. INSTALLATION LOCATION TO BE APPROVED BY PAYSON POWER

| PAYSON UTAH APRIL 2022 | CONCRETE TRANSFORMER PAD<br>THREE PHASE TRANSFORMER - 0 TO 500 kVA | STANDARD PLAN<br>P-6 | SHEET<br>1 OF 3 |
|---|---|---|---|

## ELEVATION

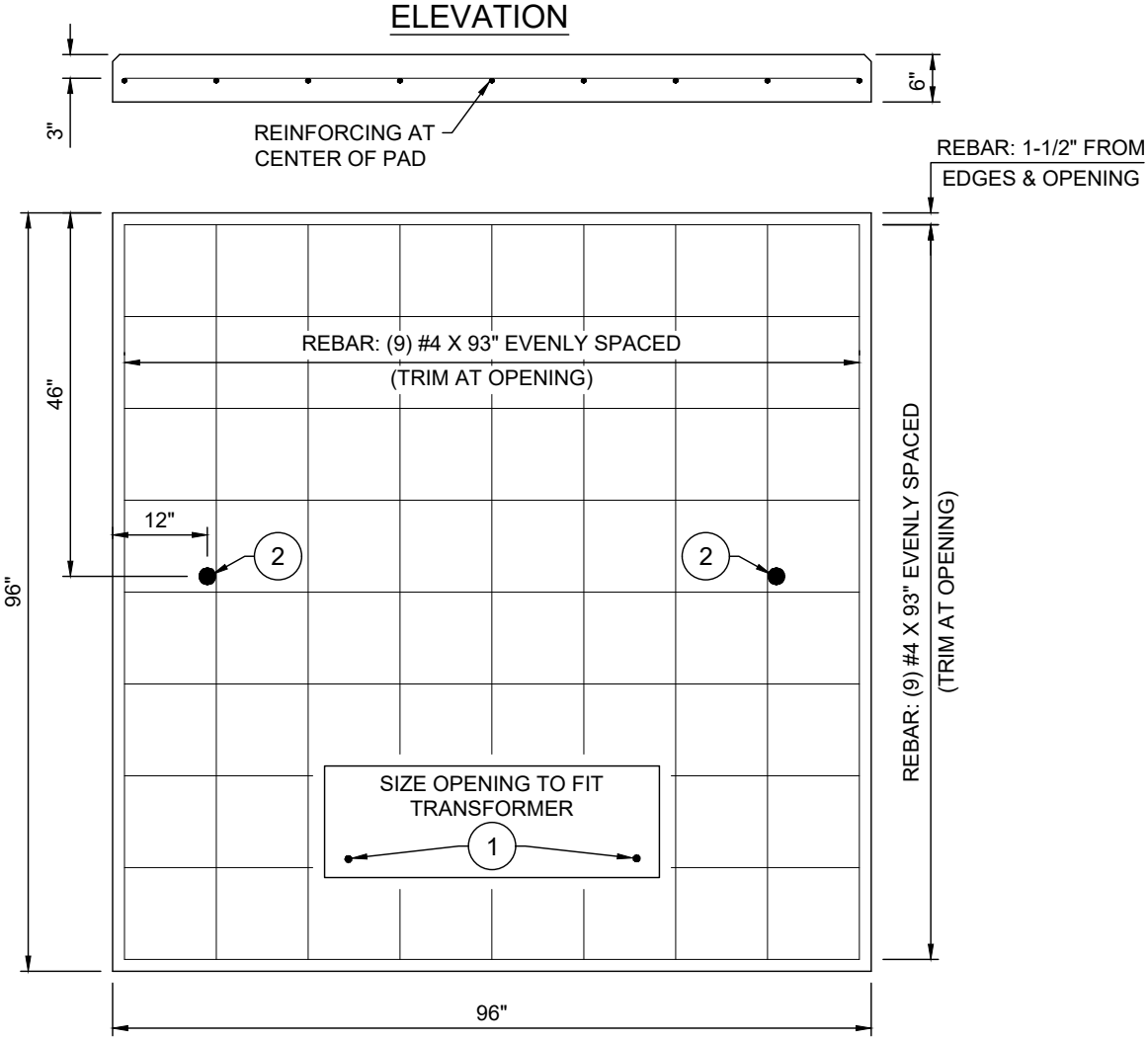


## PLAN VIEW

KEYED NOTES:

1. 5/8" X 8'-0" COPPER CLAD GROUND ROD
2. PAD ANCHOR (2 PLACES FOR PRECAST PAD)

NOTES:

1. PAD MAY BE PRECAST OR CAST-IN-PLACE
2. CONCRETE TO BE 4000 PSI MIN
3. CAST-IN-PLACE MIX MUST BE APPROVED PRIOR TO INSTALLATION
4. MIX SHOULD MEET APWA SPECIFICATIONS AT A MINIMUM
5. INSTALLATION LOCATION TO BE APPROVED BY PAYSON POWER

| | | | |
|---|---|---|---|
| PAYSON UTAH<br>APRIL 2022 | CONCRETE TRANSFORMER PAD<br>THREE PHASE TRANSFORMER - 750 TO 1000 kVA | STANDARD PLAN<br>P-6 | SHEET<br>2 OF 3 |

## ELEVATION

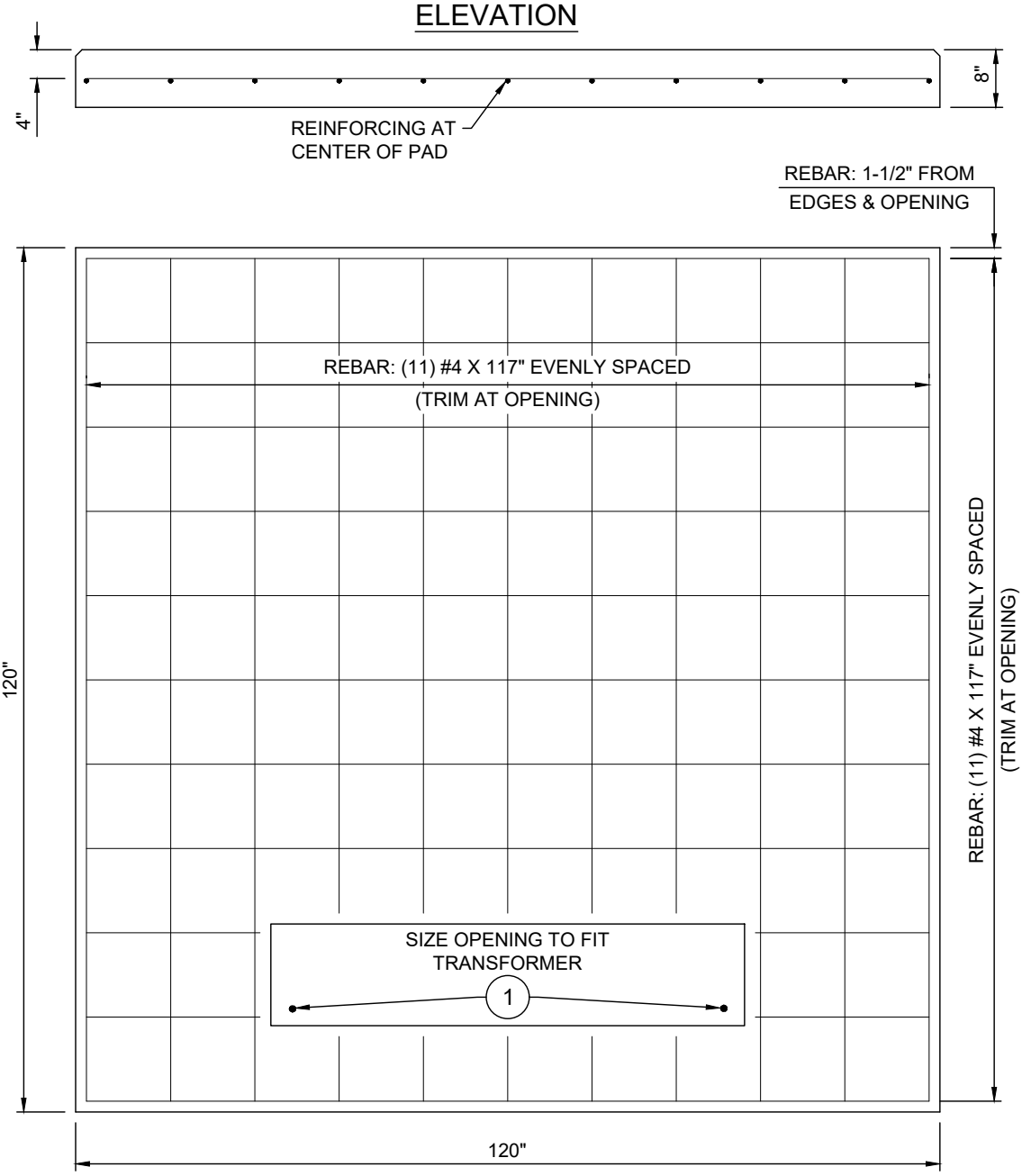


## PLAN VIEW

KEYED NOTES:

1 5/8" X 8'-0" COPPER CLAD GROUND ROD

NOTES:

1. PAD TO BE CAST-IN-PLACE
2. CONCRETE TO BE 4000 PSI MIN
3. CAST-IN-PLACE MIX MUST BE APPROVED PRIOR TO INSTALLATION
4. MIX SHOULD MEET APWA SPECIFICATIONS AT A MINIMUM
5. INSTALLATION LOCATION TO BE APPROVED BY PAYSON POWER

| | | | |
|---|---|---|---|
| PAYSON UTAH<br>APRIL 2022 | CONCRETE TRANSFORMER PAD<br>THREE PHASE TRANSFORMER - 1500 TO 2500 kVA | STANDARD PLAN<br>P-6 | SHEET<br>3 OF 3 |

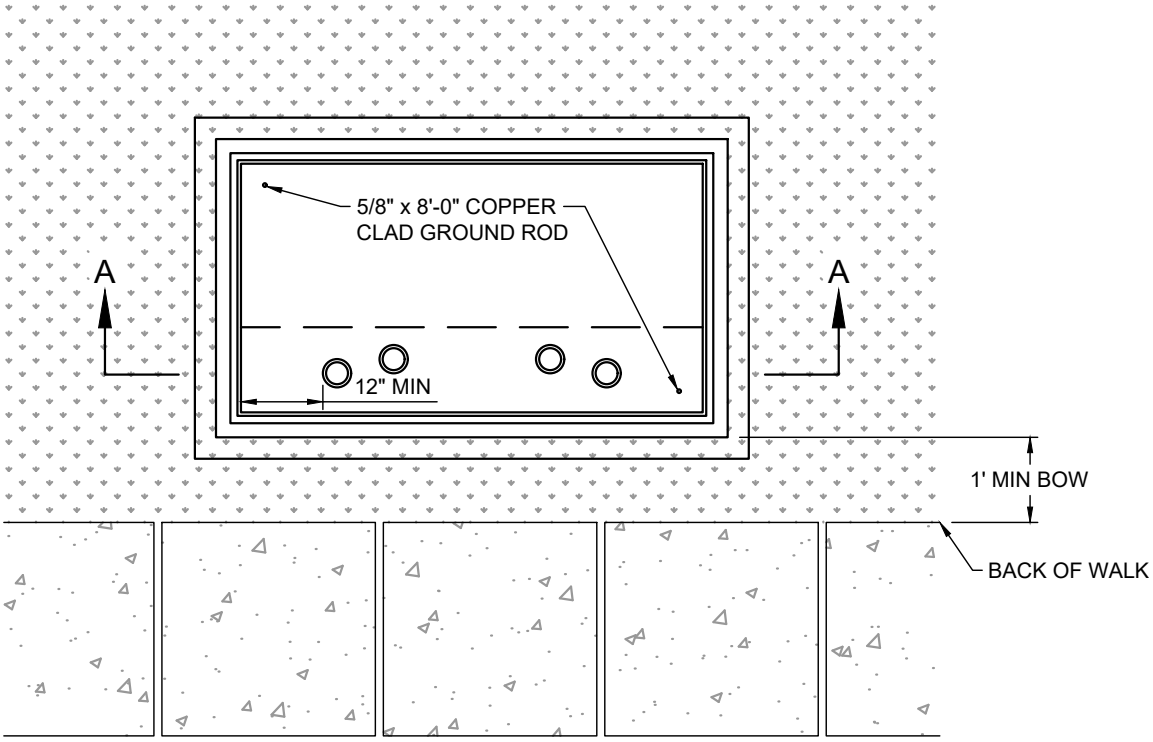


PLAN VIEW

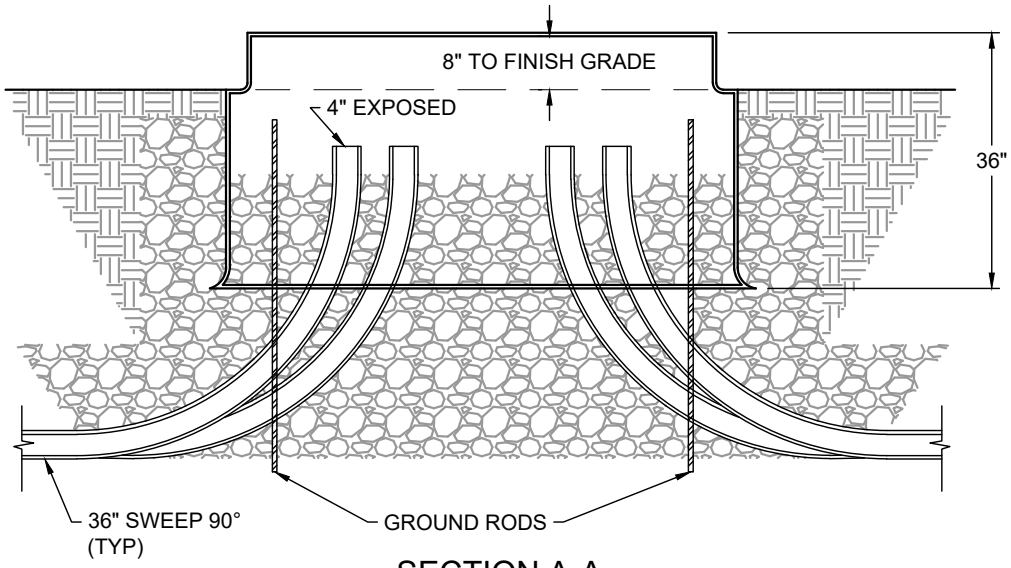


SECTION A-A

NOTES:
1. 10' OF 4/0 BARE COPPER FOR GROUNDING, CITY WILL INSTALL
2. LONG SIDE OF BOX TO PARALLEL SIDEWALK

| | | | |
|---|---|---|---|
| PAYSON UTAH<br>APRIL 2022 | PAD SWITCH SLEEVE | STANDARD PLAN<br>P-7 | SHEET<br>1 OF 1 |

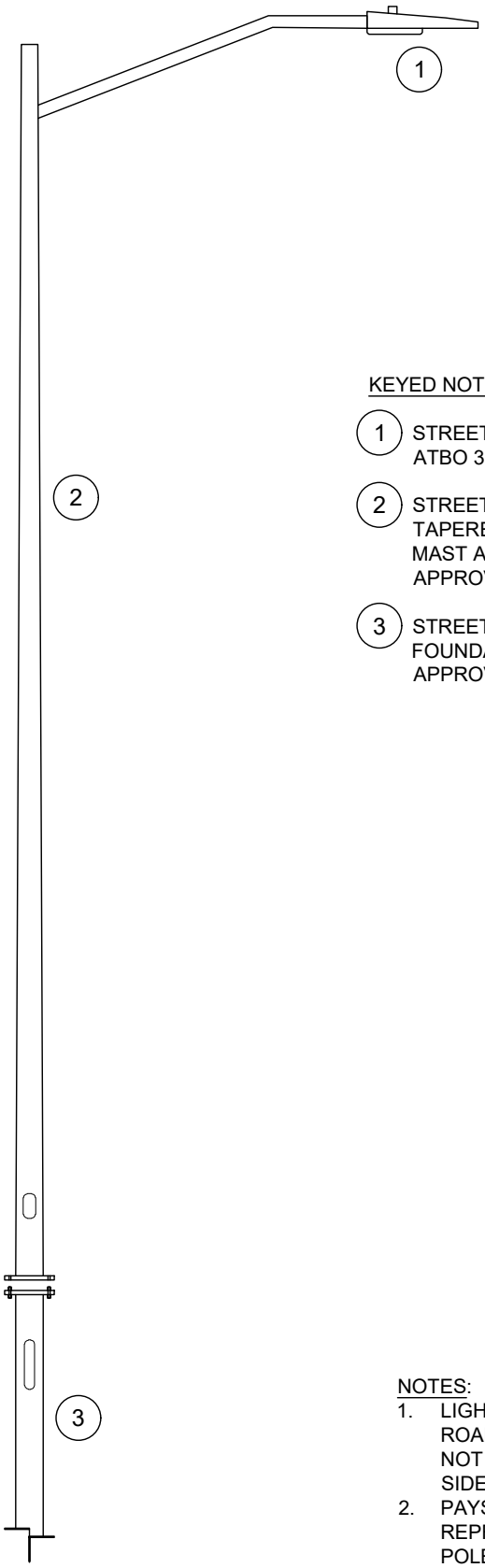


KEYED NOTES:

1. STREET LIGHT FIXTURE: AMERICAN ELECTRIC LIGHTING ATBO 30BLEDE10 MVOLT R4 P7 PCSS OR APPROVED EQUIVALENT
2. STREET LIGHT POLE: HOLOPHANE FRTAU206GBMAUS8 SB 2 ROUND TAPERED ALUMINUM POLE 25 FT, 6.0 x 4.0 x 0.188 WALL, BOLT ON MAST ARM SINGLE 8 FT, SATIN BRUSH ALUMINUM FINISH OR APPROVED EQUIVALENT
3. STREET LIGHT POLE FOUNDATION: AB CHANCE C11232JG4VL POLE FOUNDATION 6" DIAMETER FITS 9' TO 14' POLE BASE HEIGHT 60" OR APPROVED EQUIVALENT

NOTES:

1. LIGHT POLES TO BE LOCATED NEAR THE INTERSECTION OF TWO ROADS AND IN THE PLANTER STRIP. IF A PLANTER STRIP DOES NOT EXIST AND THERE IS A MONOLITHIC CURB, GUTTER, AND SIDEWALK, LOCATE THE POLE BEHIND THE SIDEWALK.
2. PAYSON CITY POWER SUPERINTENDENT OR ONE OF HIS REPRESENTATIVES WILL APPROVE THE LOCATION OF THE LIGHT POLE PRIOR TO ITS PLACEMENT.

| PAYSON UTAH APRIL 2022 | STREET LIGHT POLE AND BASE DETAIL | STANDARD PLAN P-8 | SHEET 1 OF 1 |
|---|---|---|---|

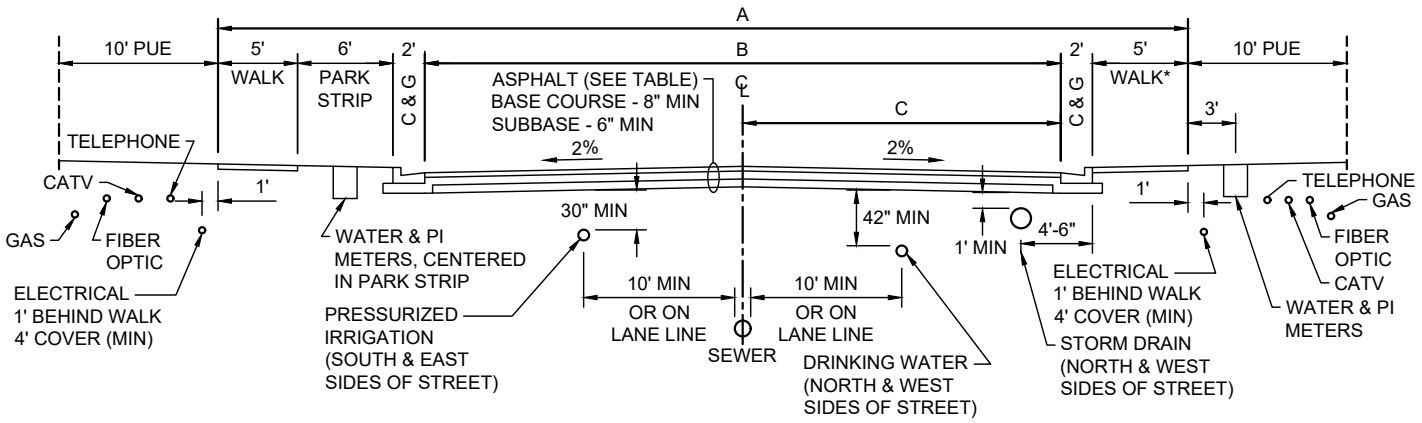


| STREET DESIGNATION | A | B | C | ASPHALT THICKNESS** |
|---|---|---|---|---|
| A-5-H | VARIES | 20' | 10' | 6" GRAVEL |
| MH ZONES | VARIES | 24' | 12' | 3-1/2" |
| INFILL LOTS / PRIVATE ROADS | VARIES | 26' | 13' | 3-1/2" |
| RESIDENTIAL | 60' | 34' | 17' | 3-1/2" |
| COLLECTOR | 76' | 50' | 25' | 5" |
| ARTERIAL | 98' | 72' | 36' | 5" |
| ARROWHEAD TRAIL*** | 108' | 86' | 43' | 5" MIN |

* THE TYPICAL SECTION IS A 5' SIDEWALK WITH A 6' PARK STRIP. A 5' SIDEWALK ADJACENT TO THE CURB IS ONLY ALLOWED IN HISTORIC AREAS AT THE DISCRETION OF THE CITY ENGINEER.

** TOTAL ASPHALT THICKNESS, 3-1/2" OR 5" AT CONSTRUCTION WITH A SLURRY SEAL AFTER 90% OF HOMES HAVE BEEN BUILT

THE A-5-H & HILLSIDE CROSS-SECTION IS ONLY FOR THESE USES AND THEY ARE PRIVATE ROADS. OTHER PRIVATE ROADS ARE ONLY ALLOWED FOR INFILL DEVELOPMENT OR PARCELS WITH PHYSICAL BARRIERS AND ARE NOT ALLOWED FOR ALL OTHER GREEN FIELD DEVELOPMENT. A SUBDIVISION OF 5 ACRES OR MORE IN SIZE DOES NOT QUALIFY FOR PRIVATE ROADS NO MATTER WHAT BARRIERS EXIST.

REFER TO THE ADOPTED TRANSPORTATION MASTER PLAN 2020 FOR STRIPING WIDTHS OF THE ROADS.

*** THE MINIMUM PAVEMENT SECTION IN ARROWHEAD TRAIL IS 5" HMA, 8" BASE COURSE, AND 10" SUBBASE. A GEOTECH REPORT IS REQUIRED TO DETERMINE IF THESE THICKNESSES ARE ADEQUATE OR WILL NEED TO BE INCREASED. ANY DEVELOPMENT TYING INTO ARROWHEAD TRAIL IS REQUIRED TO BUILD HALF THE ROAD FROM THE CENTERLINE.

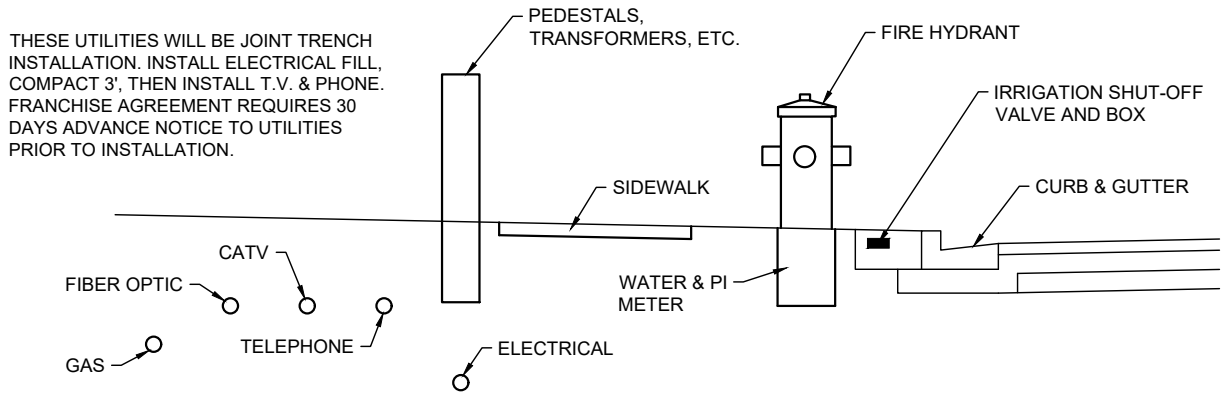


NOTES:

1. LOCATE CULINARY WATER AND PRESSURIZED IRRIGATION METER BOXES IN THE CENTER OF THE PLANTER STRIP. IF THERE IS MONOLITHIC CURB, GUTTER, AND SIDEWALK, INSTALL METER BOXES 3' BEHIND BACK OF WALK.
2. LOCATE ALL ABOVE GROUND APPURTENANCES (i.e. ELECTRICAL TRANSFORMERS AND TELEPHONE PEDESTALS) 1' BEHIND BACK OF WALK IN PUBLIC UTILITY EASEMENT.
3. SLOPE THE SIDEWALK TOWARD THE CURB AT 1/4" SLOPE.
4. INSTALL FIRE HYDRANTS ON THE WATER MAIN SIDE OF THE STREET, CENTERED IN THE PLANTER OR A MINIMUM OF 2' BEHIND BACK OF WALK FOR MONOLITHIC.

| PAYSON UTAH APRIL 2022 | STANDARD STREET CROSS SECTION | STANDARD PLAN ST-1 | SHEET 1 OF 1 |
|---|---|---|---|

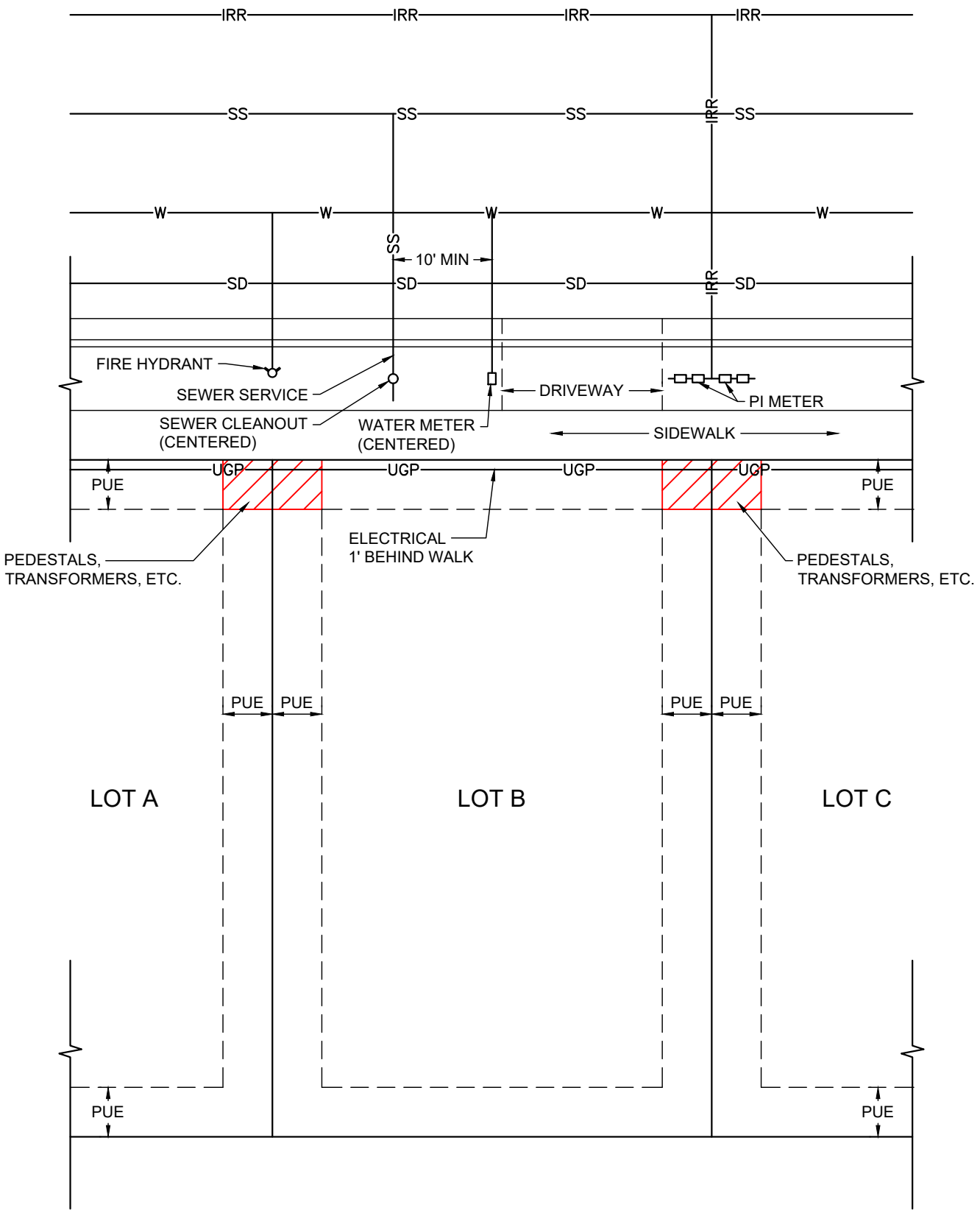


| | | | |
|---|---|---|---|
| PAYSON UTAH<br>APRIL 2022 | STANDARD PLOT PLAN | STANDARD PLAN<br>ST-2 | SHEET<br>1 OF 1 |

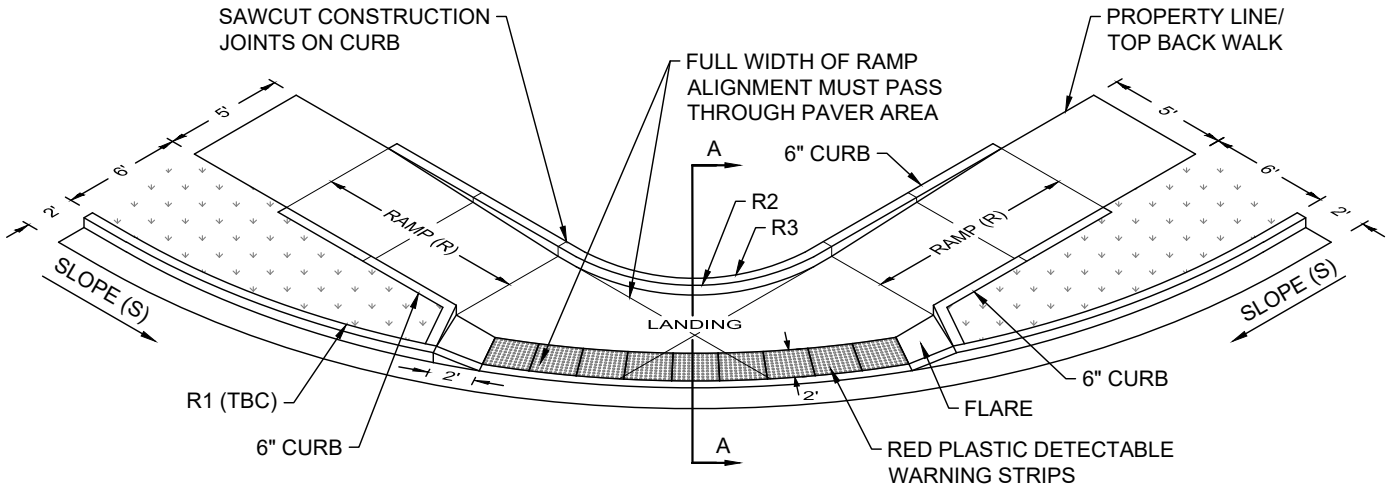


| SLOPE OF CURB AND GUTTER TO LANDING (S) | RAMP LENGTH (R) | CURB WALL |
|---|---|---|
| 0.45% OR LESS | 5' | NO |
| 0.45% TO 2.0% | 10' | YES |
| 2% OR MORE | 15' | YES |

| R1 = 35' RADIUS | | R1 = 30' RADIUS | | R1 = 25' RADIUS | |
|---|---|---|---|---|---|
| PROPERTY LINE RADIUS (R2) | TOP BACK CURB RADIUS (R3) | PROPERTY LINE RADIUS (R2) | TOP BACK CURB RADIUS (R3) | PROPERTY LINE RADIUS (R2) | TOP BACK CURB RADIUS (R3) |
| 12'-0" | 11'-6" | 7'-0" | 6'-6" | 5'-6" | 5'-0" |

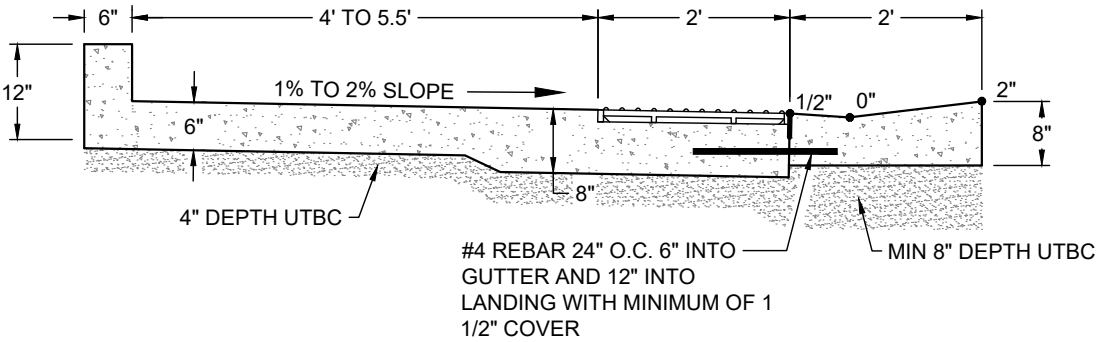


## SECTION A-A

NOTES:

1. CONTRACTOR SHALL INSTALL DETECTABLE WARNING PLATES ACCORDING TO THE STANDARDS FOR PLASTIC DETECTABLE WARNING PLATES AND MATCH PATTERN IN THIS DRAWING. RADIAL PLATES SHALL BE A PLASTIC RED COLORED PLATE AND SHALL BE ACCORDING TO THE CORRECT TBC RADIUS.
2. THE MAXIMUM SLOPE OF A STREET WITHIN 25' OF THE BEGINNING OF RADIUS IS 5.5%. VARIATION TO THE SLOPE MUST BE APPROVED BY THE CITY ENGINEER.
3. THE SLOPE OF THE FLOWLINE OF GUTTER THROUGH A PEDESTRIAN RAMP SHALL BE 2.0% OR LESS OR APPROVED BY CITY ENGINEER.
4. CURB AND GUTTER SLOPE (S) AND RAMP LENGTHS (R) SHALL BE CLEARLY LABELED AND DRAWN ON ALL PLANS, SEE TABLE FOR (R2) AND (R3).
5. RAMPS SHALL NOT EXCEED A 1:12 SLOPE.
6. STANDARD PEDESTRIAN RAMPS HAVE BEEN DESIGNED FOR NEW CONSTRUCTION. REPLACEMENT OF EXISTING PEDESTRIAN RAMPS SHALL BE DESIGNED AND STAMPED BY A PROFESSIONAL ENGINEER AND APPROVED BY THE CITY ENGINEER OR HIS/HER DESIGNEE.
7. COLD WEATHER CONCRETE MIX AND INSTALLATION PER APWA STANDARDS AND SPECIFICATIONS REQUIRED OCTOBER 1 THRU MARCH 31, OR AS REQUIRED BY THE PUBLIC WORKS DIRECTOR OR DESIGNEE.

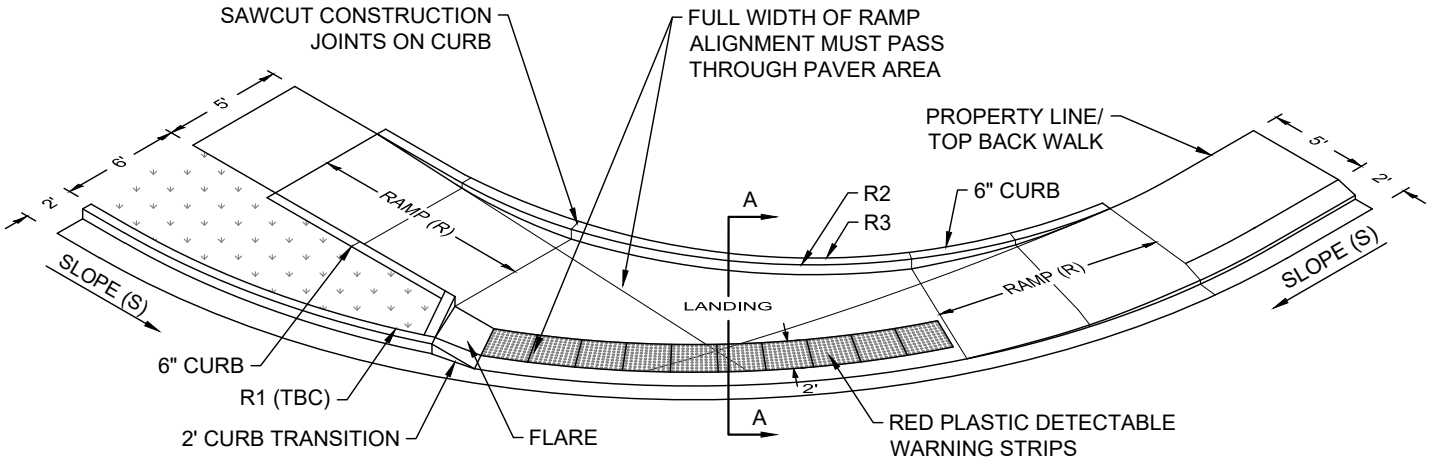


| SLOPE OF CURB AND GUTTER TO LANDING (S) | RAMP LENGTH (R) | CURB WALL |
|---|---|---|
| 0.45% OR LESS | 5' | NO |
| 0.45% TO 2.0% | 10' | YES |
| 2% OR MORE | 15' | YES |

| R1 = 35' RADIUS | | R1 = 30' RADIUS | | R1 = 25' RADIUS | |
|---|---|---|---|---|---|
| PROPERTY LINE RADIUS (R2) | TOP BACK CURB RADIUS (R3) | PROPERTY LINE RADIUS (R2) | TOP BACK CURB RADIUS (R3) | PROPERTY LINE RADIUS (R2) | TOP BACK CURB RADIUS (R3) |
| 23'-6" | 23'-0" | 19'-6" | 19'-0" | 13'-0" | 12'-6" |

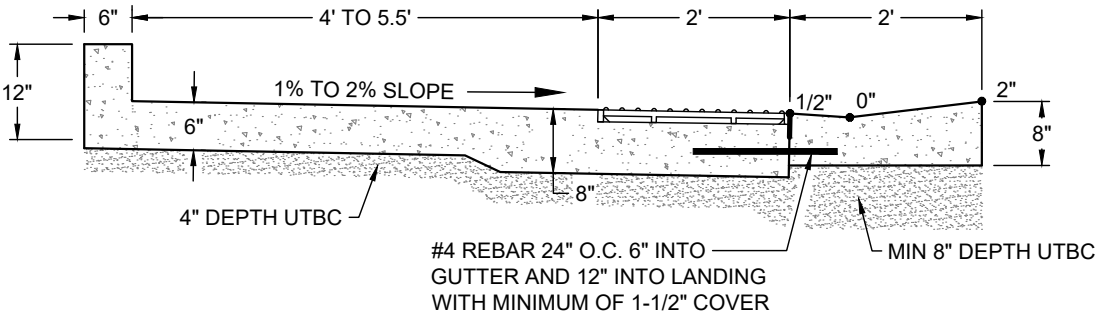


## SECTION A-A

NOTES:

1. CONTRACTOR SHALL INSTALL DETECTABLE WARNING PLATES ACCORDING TO THE STANDARDS FOR PLASTIC DETECTABLE WARNING PLATES AND MATCH PATTERN IN THIS DRAWING. RADIAL PLATES SHALL BE A PLASTIC RED COLORED PLATE AND SHALL BE ACCORDING TO THE CORRECT TBC RADIUS.
2. THE MAXIMUM SLOPE OF A STREET WITHIN 25' OF THE BEGINNING OF RADIUS IS 5.5%. VARIATION TO THE SLOPE MUST BE APPROVED BY THE CITY ENGINEER.
3. THE SLOPE OF THE FLOWLINE OF GUTTER THROUGH A PEDESTRIAN RAMP SHALL BE 2.0% OR LESS OR APPROVED BY CITY ENGINEER.
4. CURB AND GUTTER SLOPE (S) AND RAMP LENGTHS (R) SHALL BE CLEARLY LABELED AND DRAWN ON ALL PLANS, SEE TABLE FOR (R2) AND (R3).
5. RAMPS SHALL NOT EXCEED A 1:12 SLOPE.
6. STANDARD PEDESTRIAN RAMPS HAVE BEEN DESIGNED FOR NEW CONSTRUCTION. REPLACEMENT OF EXISTING PEDESTRIAN RAMPS SHALL BE DESIGNED AND STAMPED BY A PROFESSIONAL ENGINEER AND APPROVED BY THE CITY ENGINEER OR HIS/HER DESIGNEE.
7. COLD WEATHER CONCRETE MIX AND INSTALLATION PER APWA STANDARDS AND SPECIFICATIONS REQUIRED OCTOBER 1 THRU MARCH 31, OR AS REQUIRED BY THE PUBLIC WORKS DIRECTOR OR DESIGNEE.

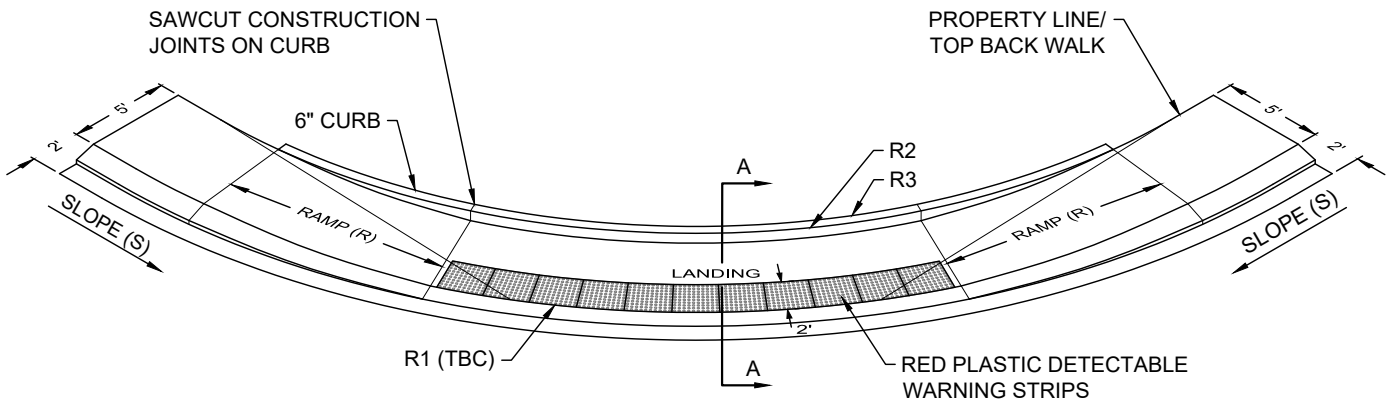


| SLOPE OF CURB AND GUTTER TO LANDING (S) | RAMP LENGTH (R) | CURB WALL |
|---|---|---|
| 0.45% OR LESS | 5' | NO |
| 0.45% TO 2.0% | 10' | YES |
| 2% OR MORE | 15' | YES |

| R1 = 35' RADIUS | | R1 = 30' RADIUS | | R1 = 25' RADIUS | |
|---|---|---|---|---|---|
| PROPERTY LINE RADIUS (R2) | TOP BACK CURB RADIUS (R3) | PROPERTY LINE RADIUS (R2) | TOP BACK CURB RADIUS (R3) | PROPERTY LINE RADIUS (R2) | TOP BACK CURB RADIUS (R3) |
| 30'-6" | 30'-0" | 25'-6" | 25'-0" | 20'-6" | 20'-0" |

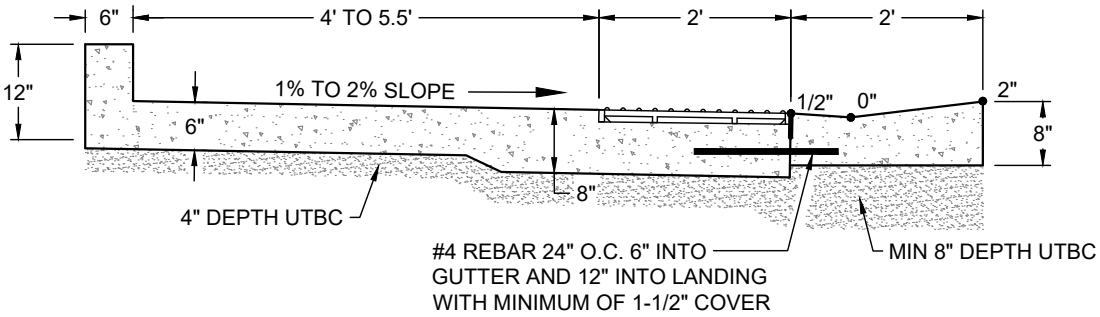


## SECTION A-A

NOTES:

1. CONTRACTOR SHALL INSTALL DETECTABLE WARNING PLATES ACCORDING TO THE STANDARDS FOR PLASTIC DETECTABLE WARNING PLATES AND MATCH PATTERN IN THIS DRAWING. RADIAL PLATES SHALL BE A PLASTIC RED COLORED PLATE AND SHALL BE ACCORDING TO THE CORRECT TBC RADIUS.
2. THE MAXIMUM SLOPE OF A STREET WITHIN 25' OF THE BEGINNING OF RADIUS IS 5.5%. VARIATION TO THE SLOPE MUST BE APPROVED BY THE CITY ENGINEER.
3. THE SLOPE OF THE FLOWLINE OF GUTTER THROUGH A PEDESTRIAN RAMP SHALL BE 2.0% OR LESS OR APPROVED BY CITY ENGINEER.
4. CURB AND GUTTER SLOPE (S) AND RAMP LENGTHS (R) SHALL BE CLEARLY LABELED AND DRAWN ON ALL PLANS, SEE TABLE FOR (R2) AND (R3).
5. RAMPS SHALL NOT EXCEED A 1:12 SLOPE.
6. STANDARD PEDESTRIAN RAMPS HAVE BEEN DESIGNED FOR NEW CONSTRUCTION. REPLACEMENT OF EXISTING PEDESTRIAN RAMPS SHALL BE DESIGNED AND STAMPED BY A PROFESSIONAL ENGINEER AND APPROVED BY THE CITY ENGINEER OR HIS/HER DESIGNEE.
7. COLD WEATHER CONCRETE MIX AND INSTALLATION PER APWA STANDARDS AND SPECIFICATIONS REQUIRED OCTOBER 1 THRU MARCH 31, OR AS REQUIRED BY THE PUBLIC WORKS DIRECTOR OR DESIGNEE.

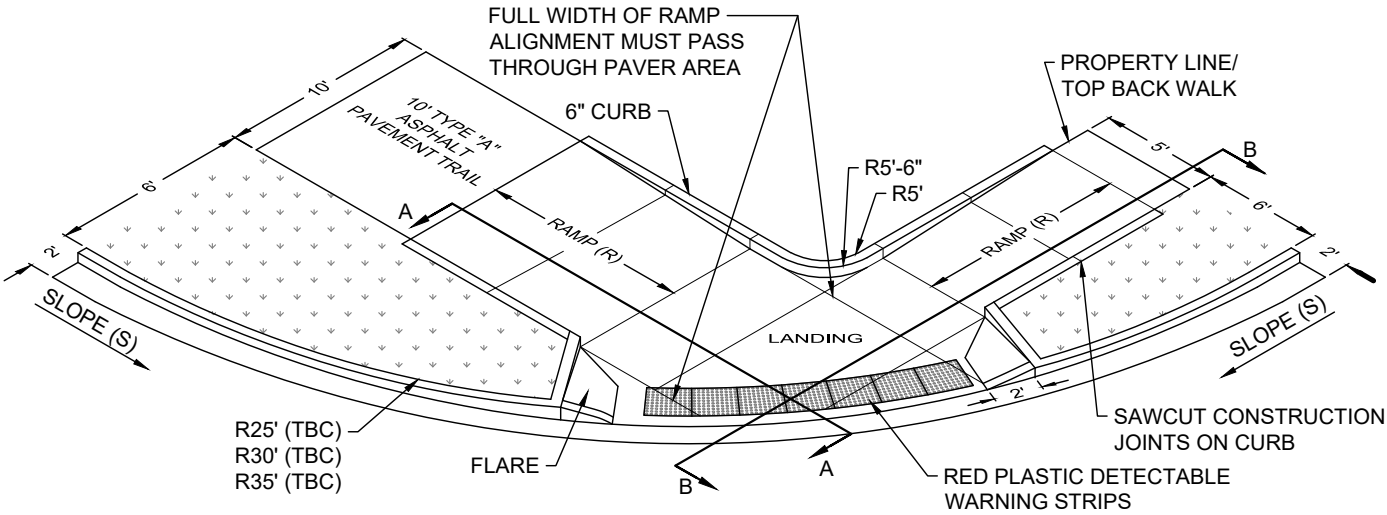


| SLOPE OF CURB AND GUTTER TO LANDING (S) | RAMP LENGTH (R) | CURB WALL |
|---|---|---|
| 0.45% OR LESS | 5' | NO |
| 0.45% TO 2.0% | 10' | YES |
| 2% OR MORE | 15' | YES |

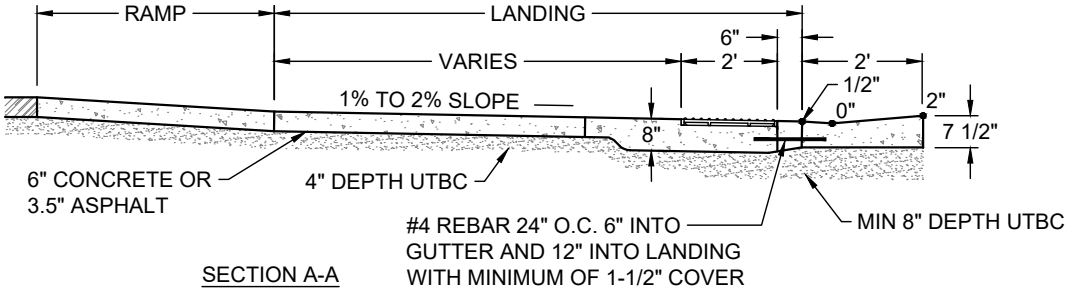


SECTION A-A

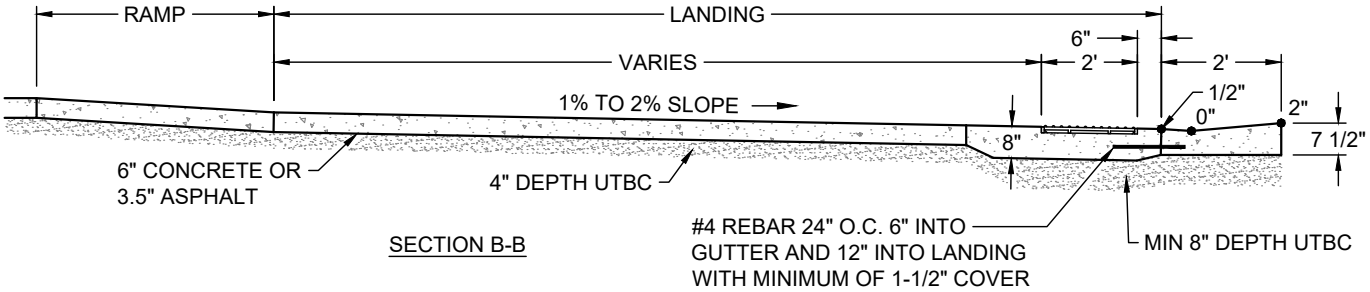


SECTION B-B

NOTES:

1. CONTRACTOR SHALL INSTALL DETECTABLE WARNING PLATES ACCORDING TO THE STANDARDS FOR PLASTIC DETECTABLE WARNING PLATES AND MATCH PATTERN IN THIS DRAWING. RADIAL PLATES SHALL BE A PLASTIC RED COLORED PLATE AND SHALL BE ACCORDING TO THE CORRECT TBC RADIUS.
2. THE MAXIMUM SLOPE OF A STREET WITHIN 25' OF THE BEGINNING OF RADIUS IS 5.5%. VARIATION TO THE SLOPE MUST BE APPROVED BY THE CITY ENGINEER.
3. THE SLOPE OF THE FLOWLINE OF GUTTER THROUGH A PEDESTRIAN RAMP SHALL BE 2.0% OR LESS OR APPROVED BY CITY ENGINEER.
4. CURB AND GUTTER SLOPE (S) AND RAMP LENGTHS (R) SHALL BE CLEARLY LABELED AND DRAWN ON ALL PLANS, SEE TABLE FOR (R2) AND (R3).
5. RAMPS SHALL NOT EXCEED A 1:12 SLOPE.
6. STANDARD PEDESTRIAN RAMPS HAVE BEEN DESIGNED FOR NEW CONSTRUCTION. REPLACEMENT OF EXISTING PEDESTRIAN RAMPS SHALL BE DESIGNED AND STAMPED BY A PROFESSIONAL ENGINEER AND APPROVED BY THE CITY ENGINEER OR HIS/HER DESIGNEE.
7. COLD WEATHER CONCRETE MIX AND INSTALLATION PER APWA STANDARDS AND SPECIFICATIONS REQUIRED OCTOBER 1 THRU MARCH 31, OR AS REQUIRED BY THE PUBLIC WORKS DIRECTOR OR DESIGNEE.

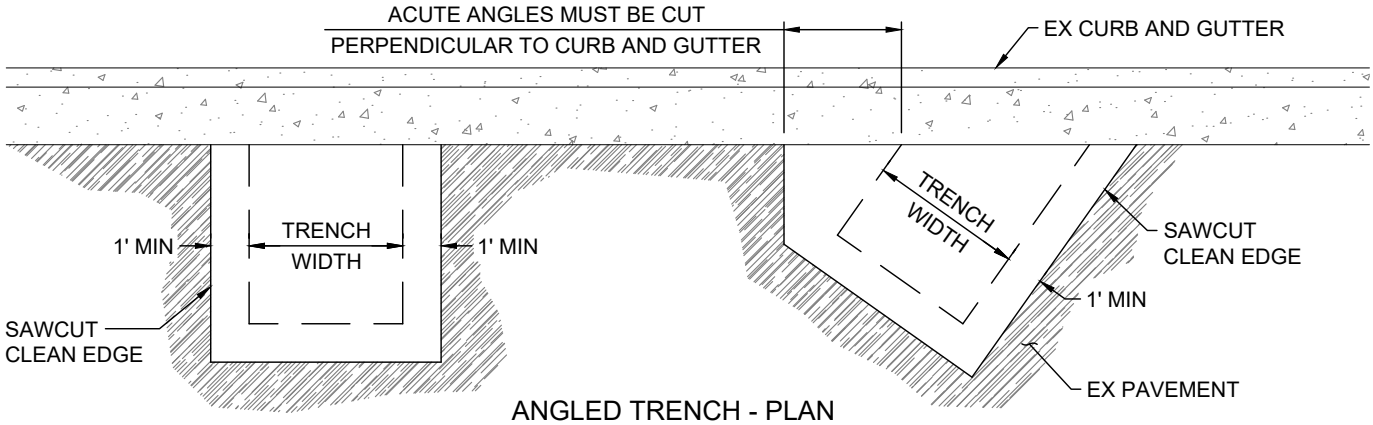


ANGLED TRENCH - PLAN

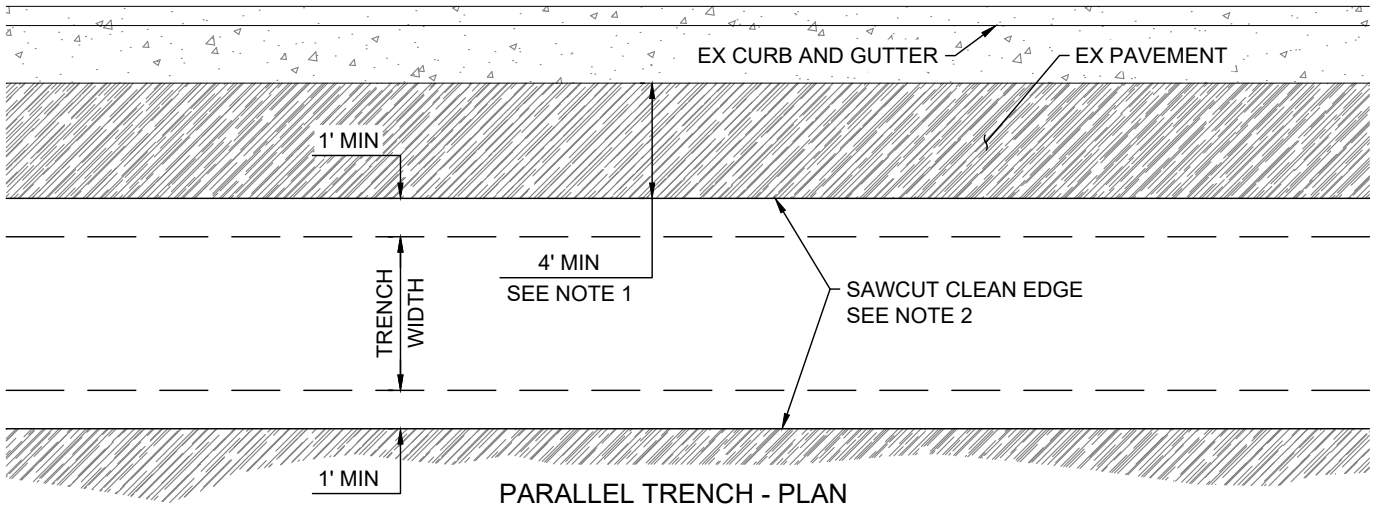


PARALLEL TRENCH - PLAN

NOTES:

1. IF DISTANCE BETWEEN CLEAN SAWCUT EDGE AND EX GUTTER IS LESS THAN 4', REMOVE AND REPLACE ASPHALT TO LIP OF GUTTER.
2. SAWCUT EDGE MUST NOT BE IN WHEEL PATH. REPLACE TO CENTER OF ROAD, CENTER OF LANE, OR LANE LINE. WHICHEVER IS CLOSEST AND MORE THAN 1' FROM EDGE OF TRENCH.

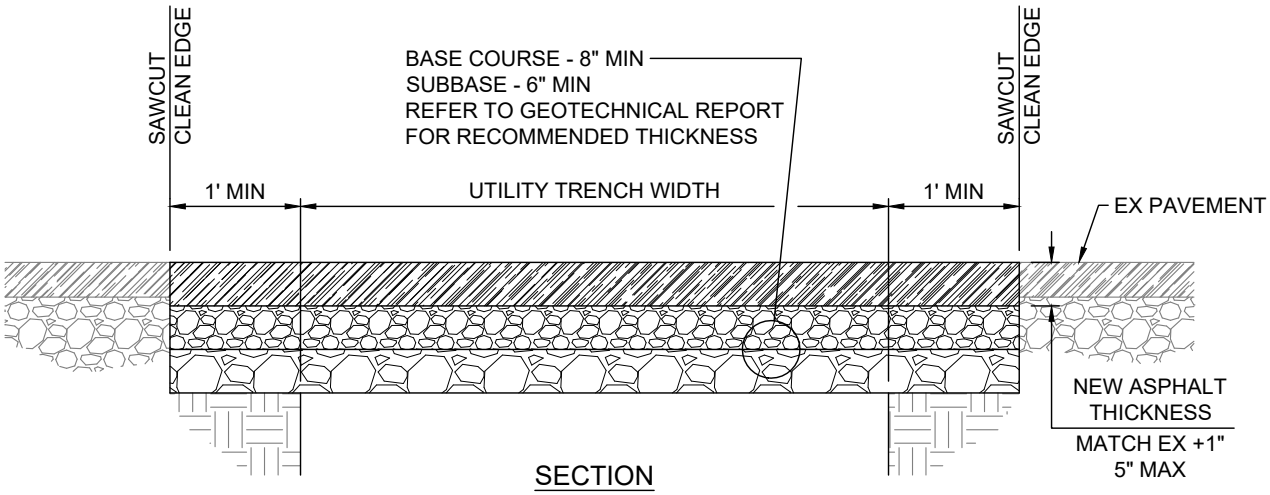


SECTION

| | | | |
|---|---|---|---|
| PAYSON UTAH APRIL 2022 | PAVEMENT RESTORATION | STANDARD PLAN ST-4 | SHEET 1 OF 2 |

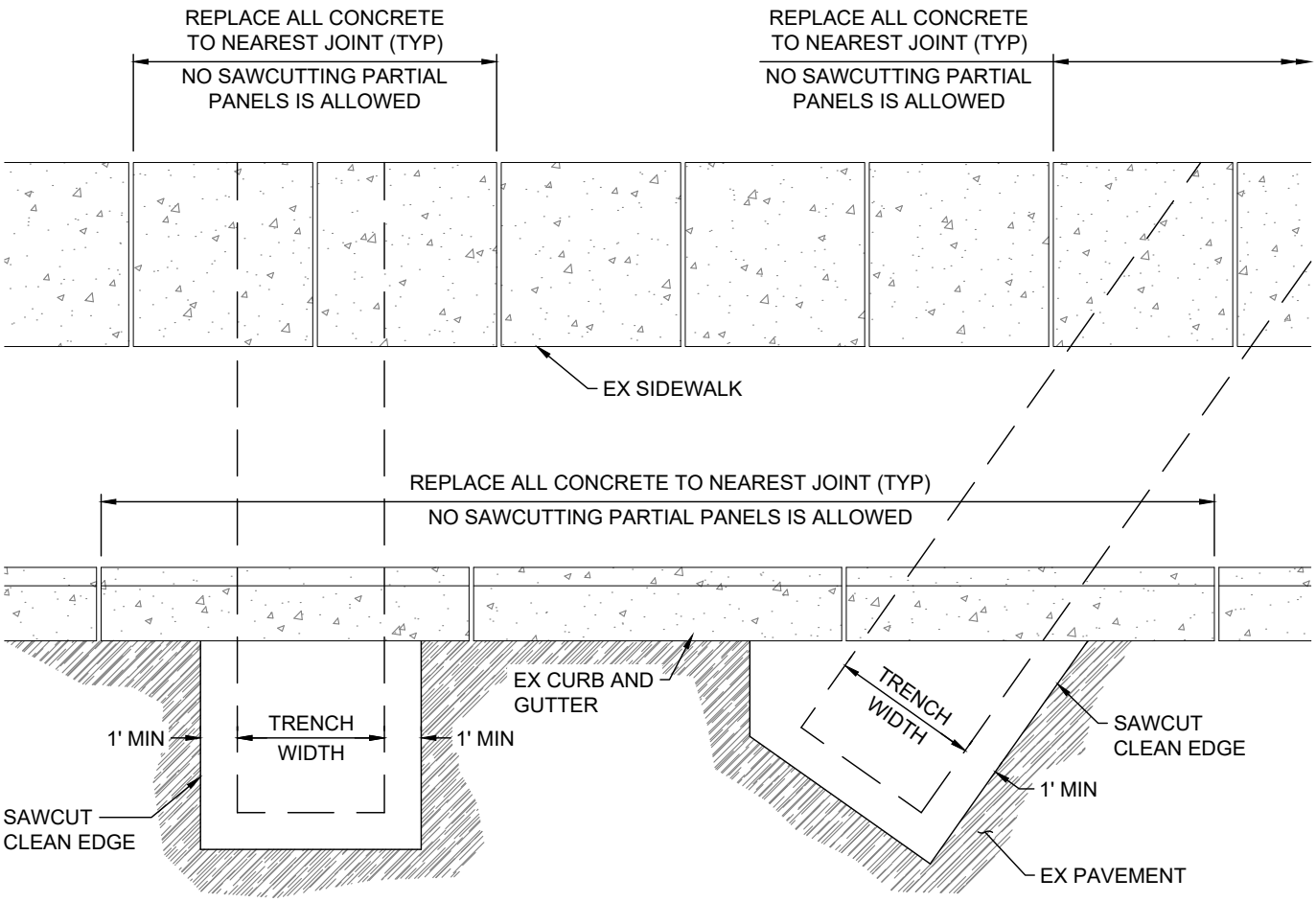


NOTES:

1. REPLACE ALL DAMAGED CONCRETE TO THE NEAREST JOINT
2. NO SAWCUTTING PARTIAL PANELS IS ALLOWED
3. ALL SIDEWALK WITHIN THE PAYSON CITY RIGHT-OF-WAY TO BE 6" THICK CONCRETE PAVEMENT.
4. WHERE THERE IS NO PLANTER STRIP, EXPANSION JOINT IS REQUIRED BETWEEN THE BACK OF CURB AND ADJACENT CONCRETE.

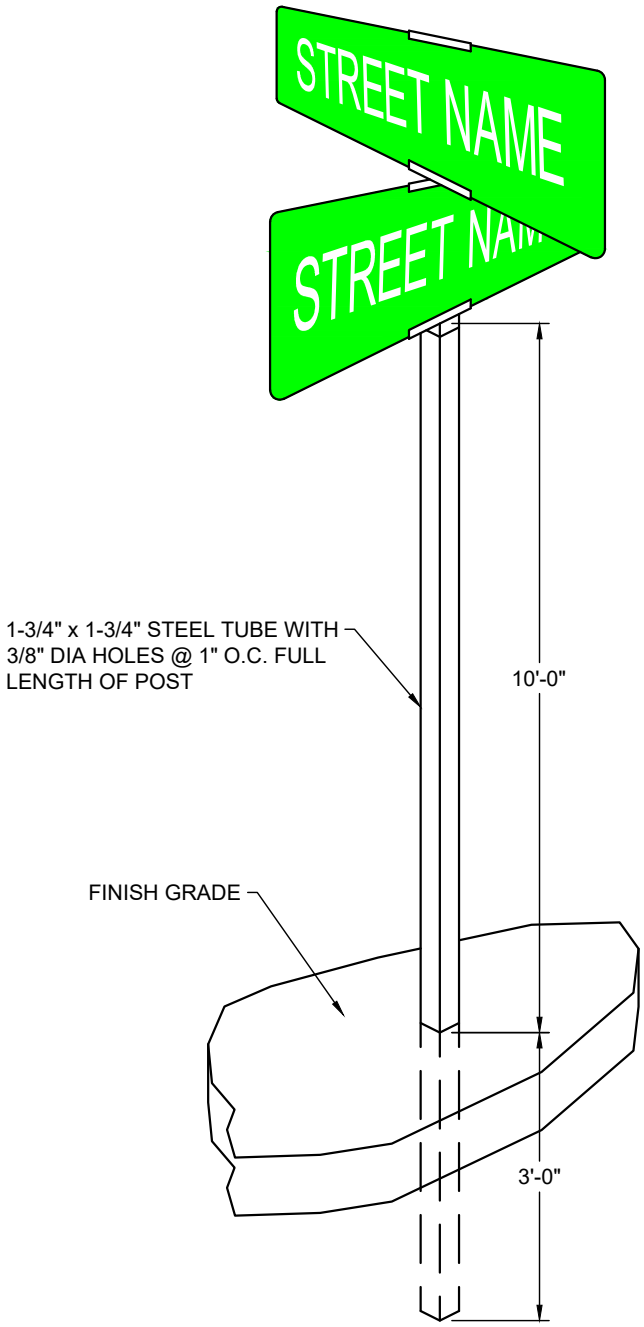

PUBLIC STREET SIGN

PRIVATE STREET SIGN

NOTES:

1. STREET NAME SIGN TO BE 8" ALUMINUM SIGN, DOUBLE SIDED WITH HIGH INTENSITY PRISMATIC SHEETING AND 6" UPPER CASE STREET NAME LETTERING.
2. PROOFS TO BE APPROVED BY PAYSON CITY PUBLIC WORKS PRIOR TO MANUFACTURING.
3. PUBLIC STREET SIGN TO BE GREEN BACKGROUND WITH WHITE LETTERING.
4. PRIVATE STREET SIGN TO BE BLUE BACKGROUND WITH WHITE LETTERING.
5. NO CITY LOGO REQUIRED ON STREET NAME SIGN.
6. ALL BOLTS, NUTS, WASHERS, AND ACCESSORIES TO BE STAINLESS OR GALVANIZED STEEL.

| PAYSON UTAH APRIL 2022 | STREET NAME SIGN AND POST DETAIL | STANDARD PLAN ST-5 | SHEET 1 OF 1 |
|---|---|---|---|

NOTES:

1. ALL STRUCTURES AND PARTS OF STRUCTURES SHALL BE PRE-CAST TO CONFORM TO ASTM C478
2. THE PRE-TREATMENT STRUCTURE SHALL BE CONSTRUCTED TO ENSURE WATER TIGHTNESS
3. SNOUT OR APPROVED EQUIVALENT PRE-TREATMENT DEVICE MAY BE USED AS ALTERNATE TO PIPE CONFIGURATION SHOWN IN THE DETAIL BELOW
4. THE SUMP SHALL BE LOCATED 5' (MIN) OFFSET FROM PRE-TREATMENT STRUCTURE AND PERPENDICULAR TO GUTTER ALIGNMENT
5. THE SUMP LID SHALL NOT BE LOCATED IN THE SIDEWALK SECTION
6. ANY APPROVED EQUIVALENTS REQUIRE CITY ENGINEER'S WRITTEN APPROVAL
7. D & L I-3518 OR APPROVED EQUIVALENT IS PREFERRED FOR CURB FACED INLETS
8. SWPP BMPS TO BE REMOVED AND ALL STORM DRAIN STRUCTURES AND LINES TO BE CLEANED AND CCTV INSPECTION PERFORMED PRIOR TO FINAL ACCEPTANCE

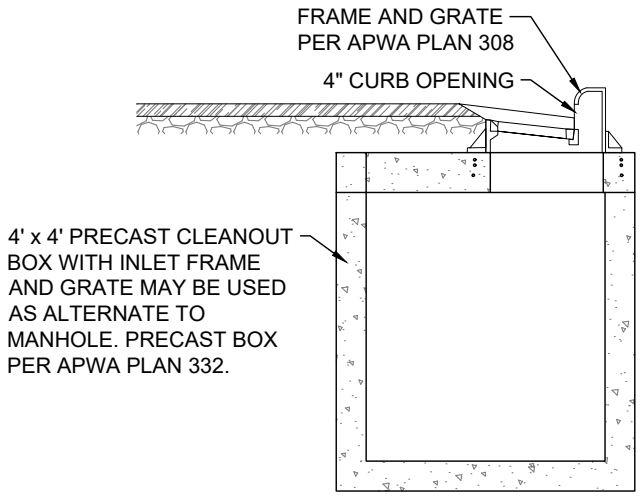


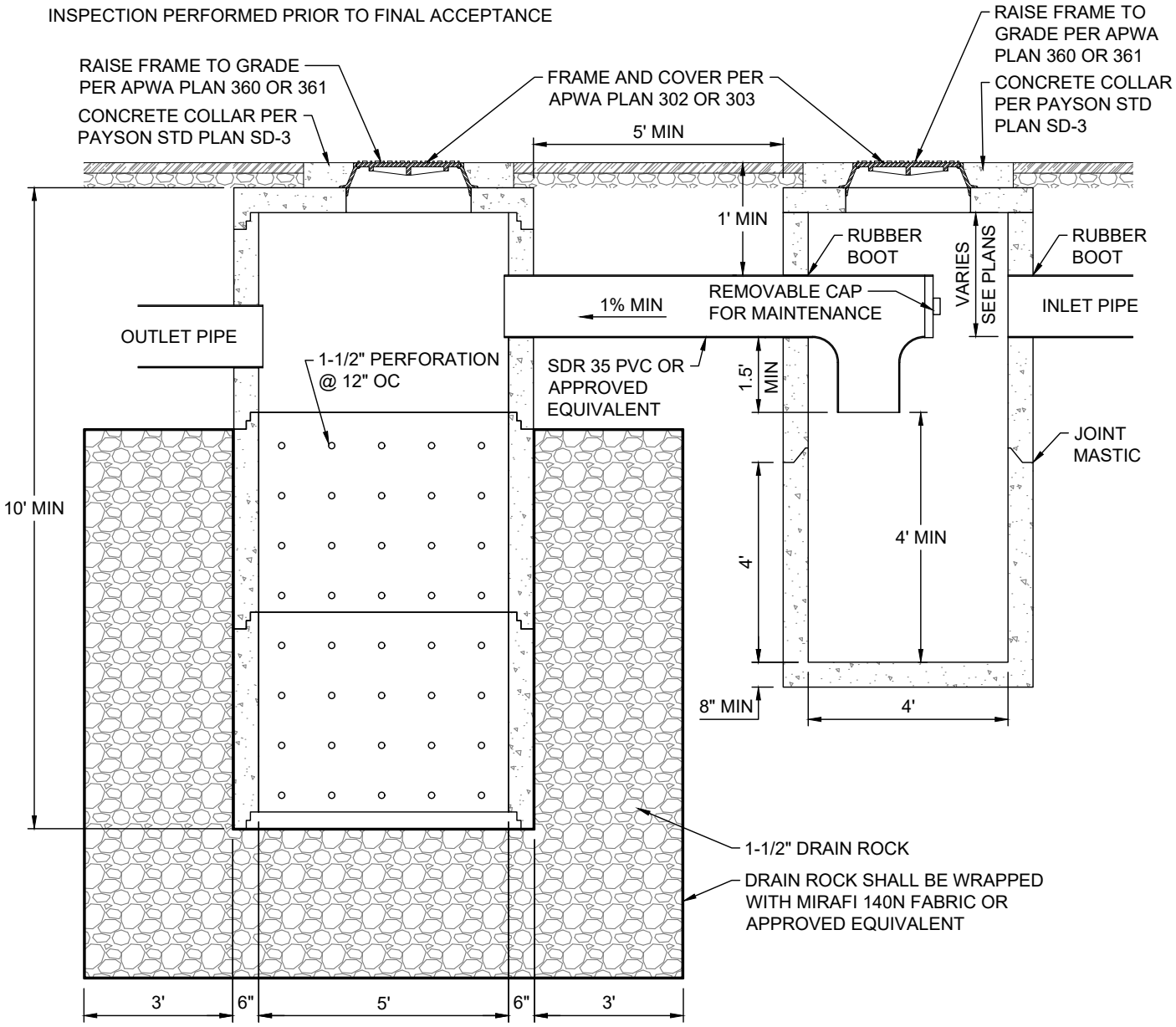


| | | | |
|---|---|---|---|
| PAYSON UTAH APRIL 2022 | PRE-TREATMENT STRUCTURE AND SUMP DETAIL | STANDARD PLAN SD-1 | SHEET 1 OF 1 |

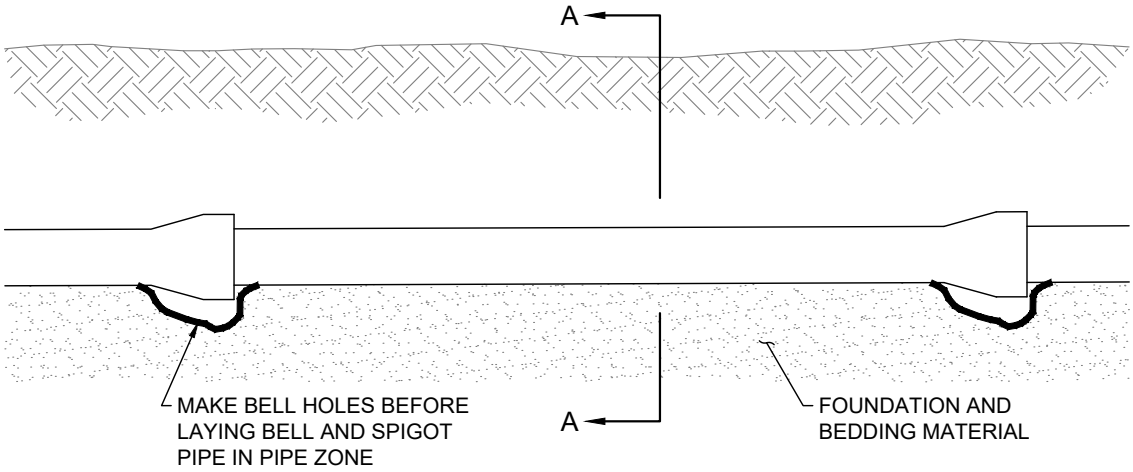


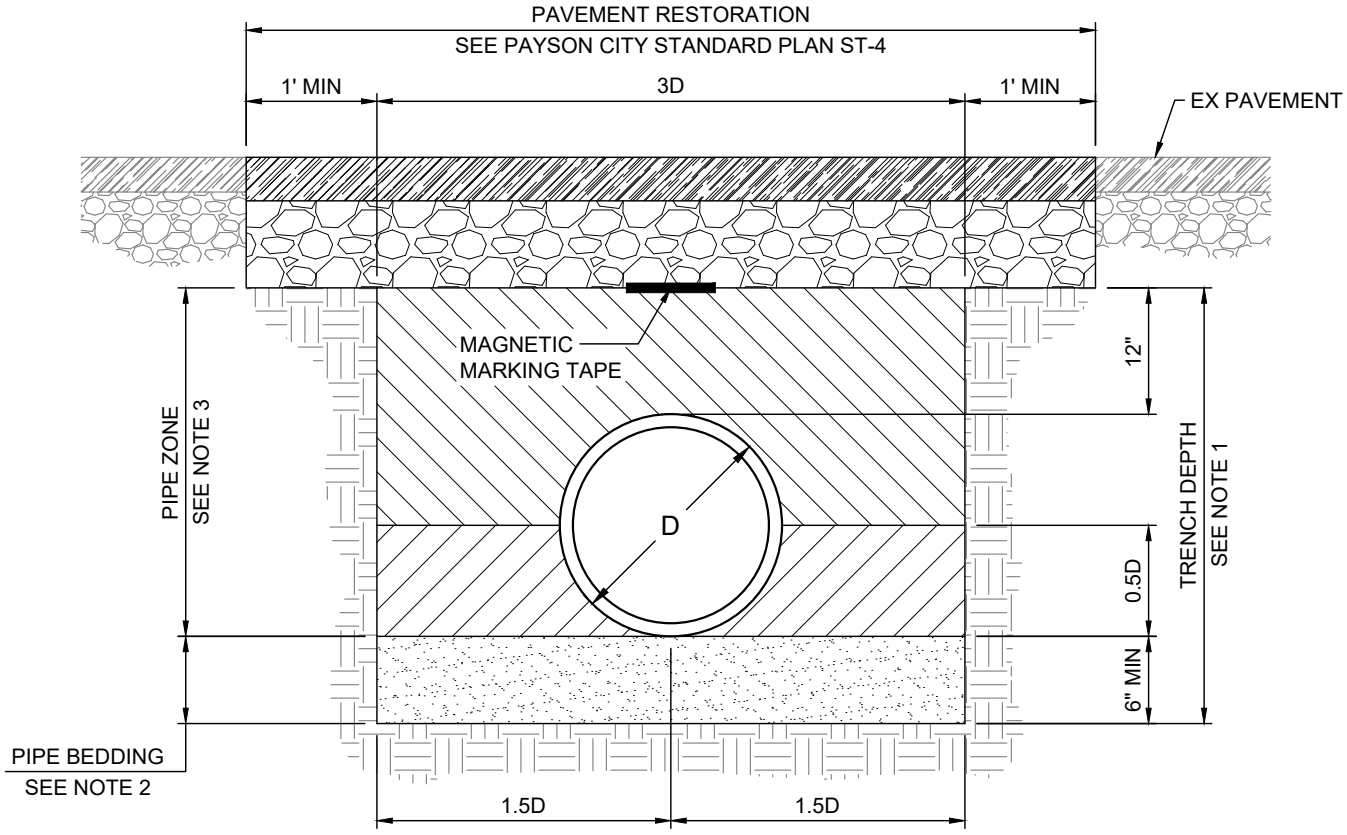


SECTION A

NOTES:

1. IF DEPTH OF TRENCH IS GREATER THAN 4-FT AND SHORES OR TRENCH SUPPORTS ARE NOT USED, SLOPES ARE REQUIRED PER OSHA REGULATIONS. REFER TO APWA PLAN 381 FOR ADDITIONAL INFORMATION.
2. PIPE BEDDING: UNTREATED BASE COURSE PER APWA SECTION 32 11 23. INSTALL PER APWA SECTION 33 05 20.
3. PIPE ZONE BACKFILL: A-1-A OR NATIVE MATERIAL (UPON APPROVAL) PER APWA SECTION 31 05 13. MATERIAL MUST MEET APWA STANDARD FOR GRANULAR BORROW. COMPACT TO 96% DENSITY PER ASTM D-1557. CONTRACTOR MUST SUBMIT GRADATION AND PROCTOR DENSITY DATA OF NATIVE MATERIAL TO BE CONSIDERED FOR BACKFILL. ALL NATIVE MATERIAL TO BE USED AS FILL MUST HAVE ALL ORGANIC MATERIAL, RUBBISH, DEBRIS, AND OTHER OBJECTIONABLE MATERIALS REMOVED.

| PAYSON UTAH APRIL 2022 | STORM AND SANITARY SEWER PIPE TRENCH | STANDARD PLAN SD-2 | SHEET 1 OF 1 |
|---|---|---|---|

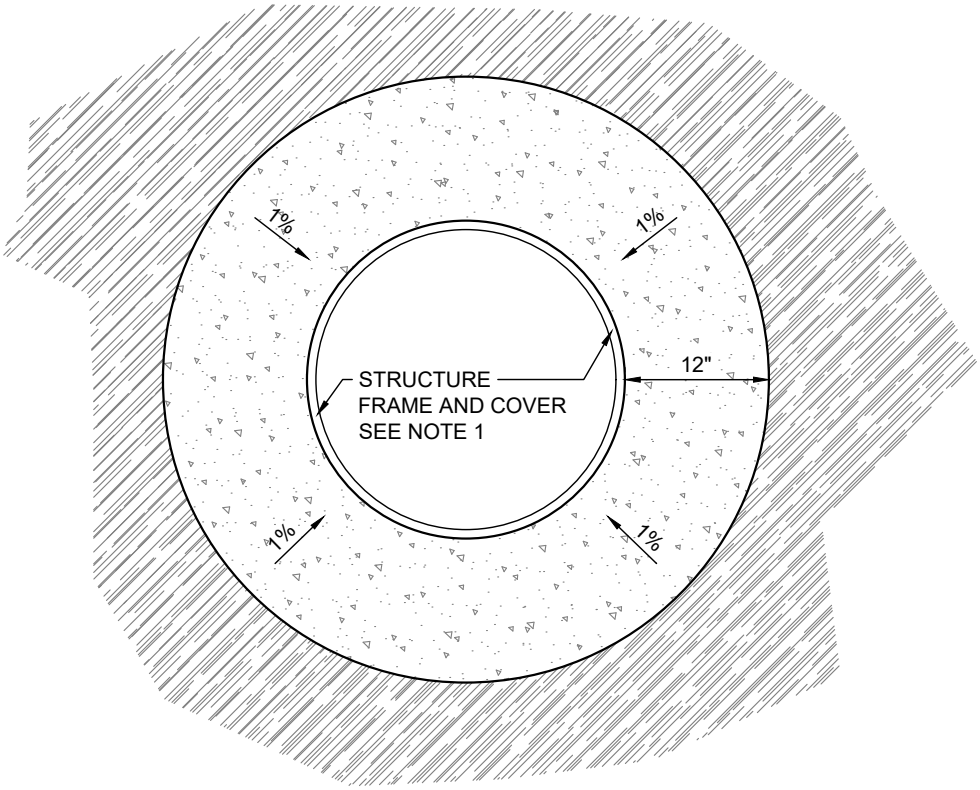


PLAN

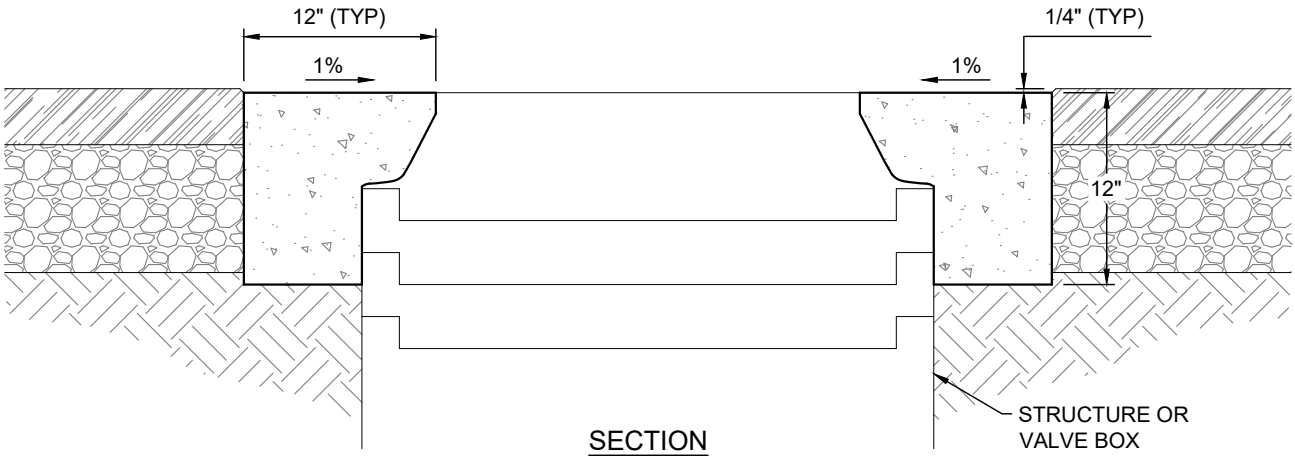


SECTION

NOTES:

1. STRUCTURE FRAME AND COVER:
   STORM DRAIN - APWA PLAN 302 OR 303
   SANITARY SEWER - APWA PLAN 402
   WATER - APWA PLAN 502 OR CAST IRON VALVE BOX
2. USE ONLY 4000 PSI CONCRETE MEETING APWA SECTION 03 30 04.
3. PROVIDE A NEAT VERTICAL AND CONCENTRIC JOINT BETWEEN CONCRETE AND PAVED SURFACE. CLEAN EDGES OF ALL DIRT, OIL, AND LOOSE DEBRIS.
4. INSTALL 12" THICK CONCRETE COLLAR ACCORDING TO APWA SECTION 03 30 10. APPLY BROOM FINISH AND CURING AGENT PER APWA SECTION 03 39 00.
5. PROVIDE 1/4" LIP FROM TOP OF PAVEMENT TO TOP OF CONCRETE COLLAR. SLOPE COLLAR TOWARDS THE CENTER AND STRUCTURE COVER. NO DEVIATION FROM THIS STANDARD IS PERMITTED. LIPS GREATER THAN 1/4" WILL BE CORRECTED AT THE CONTRACTOR'S EXPENSE.

| | | | |
|---|---|---|---|
| PAYSON UTAH<br>APRIL 2022 | CONCRETE COLLAR DETAIL | STANDARD PLAN<br>SD-3 | SHEET<br>1 OF 1 |

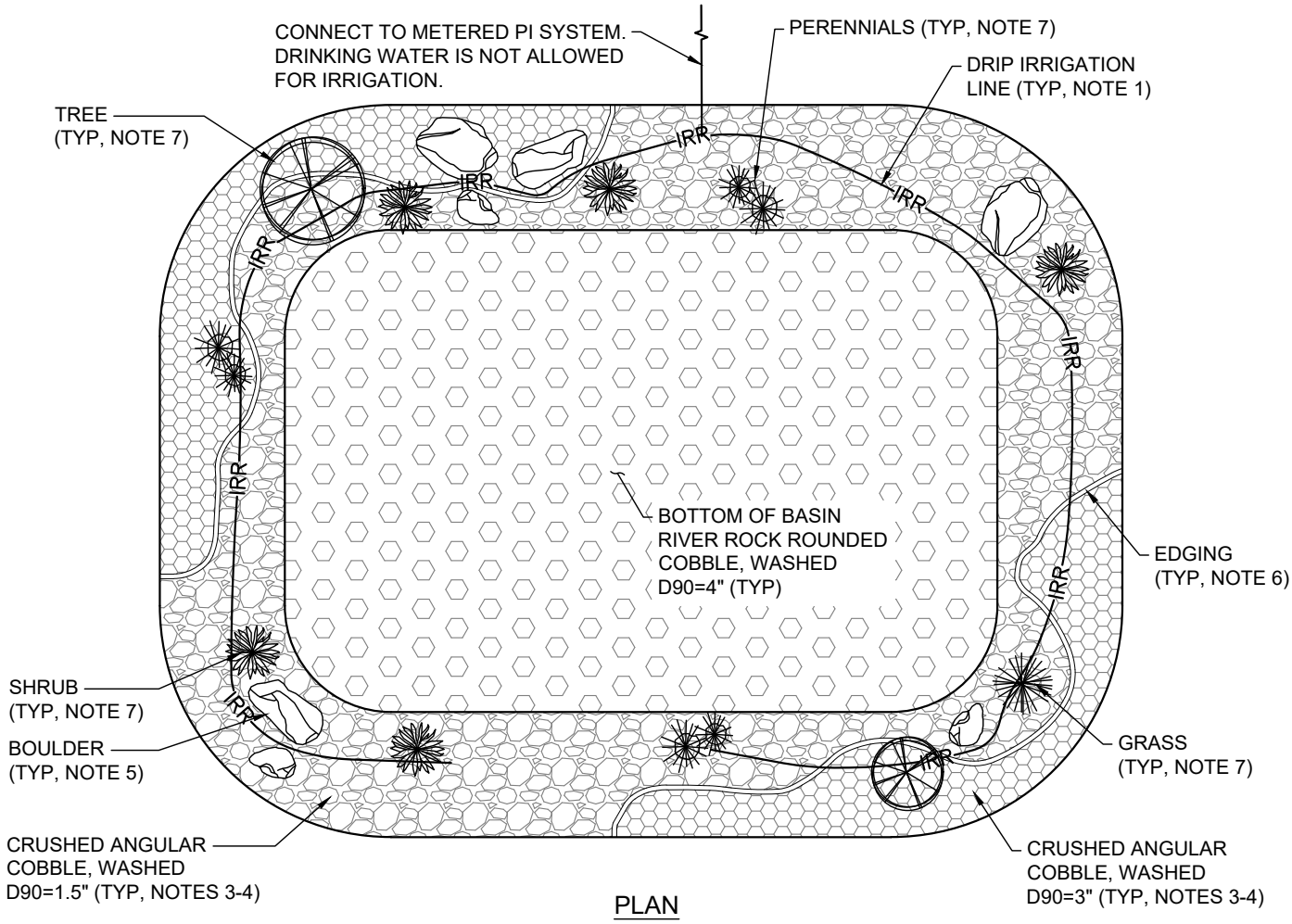


PLAN

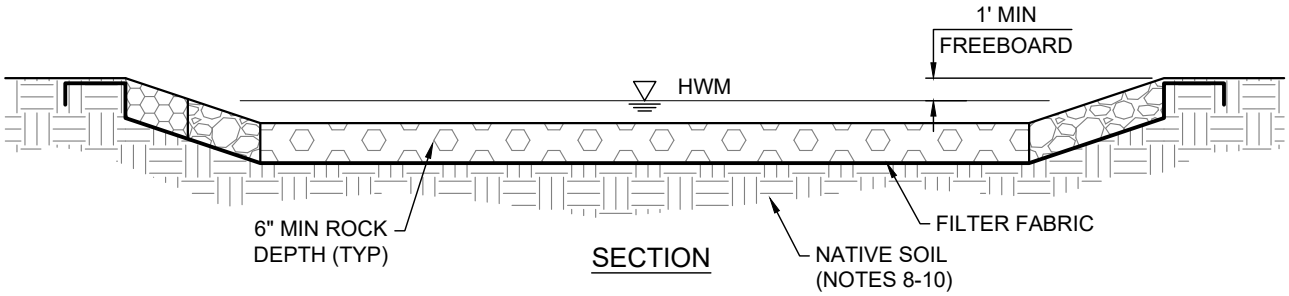


SECTION

NOTES:

1. WATER WISE LANDSCAPING REQUIRED. USE ONLY DRIP EMITTERS OR BUBBLERS FOR IRRIGATION.
2. INSTALL FILTER FABRIC PER MANUFACTURER'S SPECIFICATIONS.
3. ROCK MULCH TO MEET PAYSON CITY DESIGN STANDARDS.
4. PROVIDE A MINIMUM OF 2 DIFFERING ROCK MULCH STYLES.
5. PROVIDE BOULDERS THAT MEASURE 24" TO 48" IN DIAMETER ALONG THE SMALLEST AXIS.
6. PROVIDE 12 GAUGE STEEL OR CONCRETE CURB EDGING.
7. SELECT PLANTS NATIVE TO THE AREA THAT ARE LOW MAINTENANCE, WATER -CONSERVING PLANTS.
8. BASIN MUST PROVIDE STORAGE FOR 100-YR STORM EVENT AND COMPLETELY DRAIN WITHIN 72 HOURS. OVER EXCAVATION OF NATIVE CLAYS AND INSTALLATION OF FREE DRAINING MATERIAL MAY BE REQUIRED.
9. IF INFILTRATION IS THE PRIMARY METHOD OF POND DRAINAGE, A PERCOLATION TEST MUST BE PERFORMED IN THE LOCATION OF THE FUTURE POND TO CONFIRM INFILTRATION RATE. PERCOLATION TEST MUST BE PERFORMED AT THE LOWEST ANTICIPATED POND ELEVATION.
10. A SUMP MAY BE REQUIRED TO FACILITATE INFILTRATION AND GET THROUGH CLAY OR OTHER SLOW INFILTRATING SOIL LAYERS. A GEOTECHNICAL BORING IS REQUIRED TO DETERMINE THE DEPTH OF SOILS THAT WILL ALLOW PERCOLATION.

| PAYSON UTAH APRIL 2022 | DETENTION / RETENTION BASIN DETAIL | STANDARD PLAN SD-4 | SHEET 1 OF 1 |
|---|---|---|---|

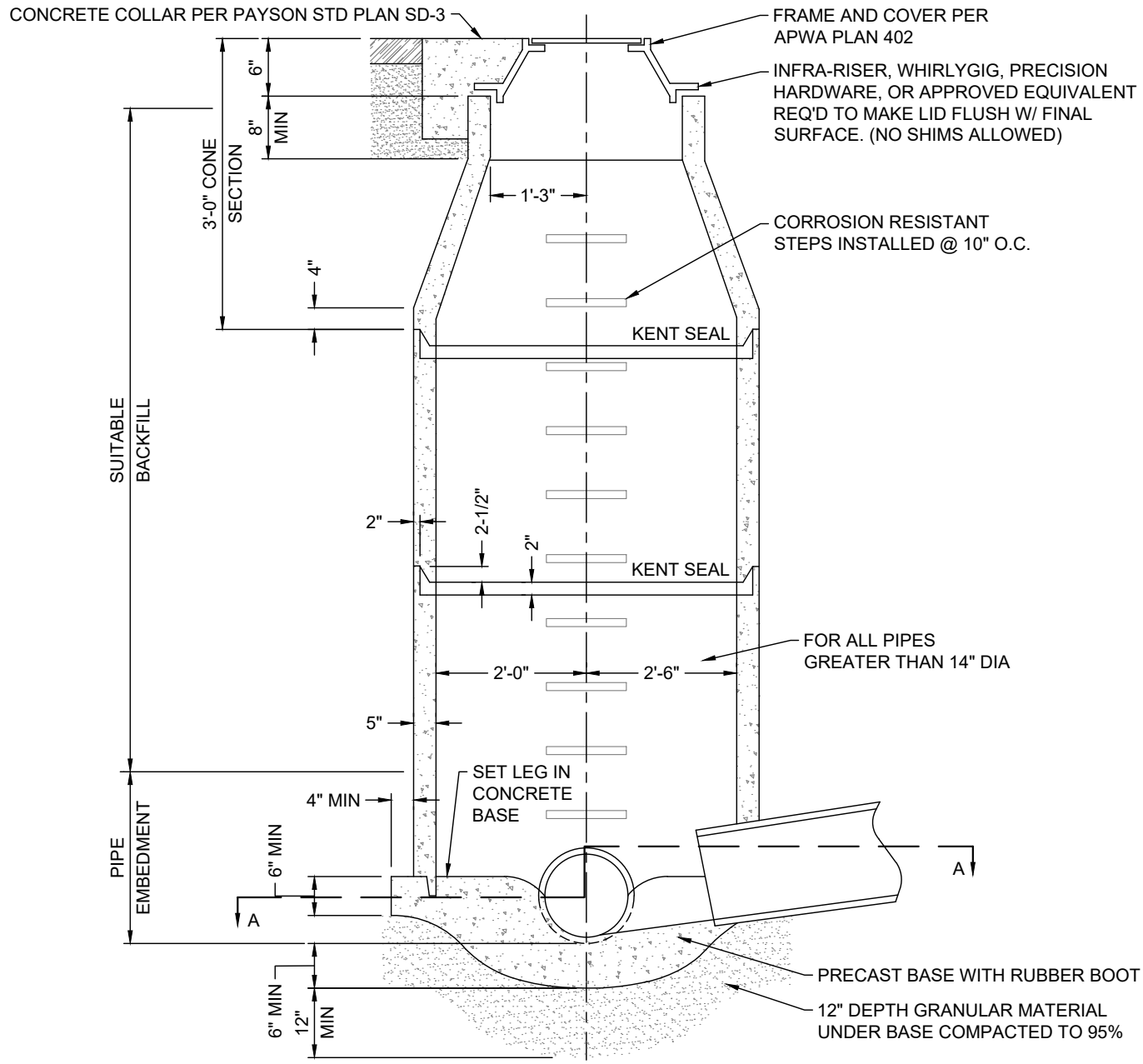


NOTES:

1. MANHOLE BASE AND PRECAST TO CONFORM TO ASTM C478
2. NO 4" LATERAL CONNECTIONS ALLOWED INTO MANHOLES
3. NO REVERSIBLE HARDWARE ALLOWED

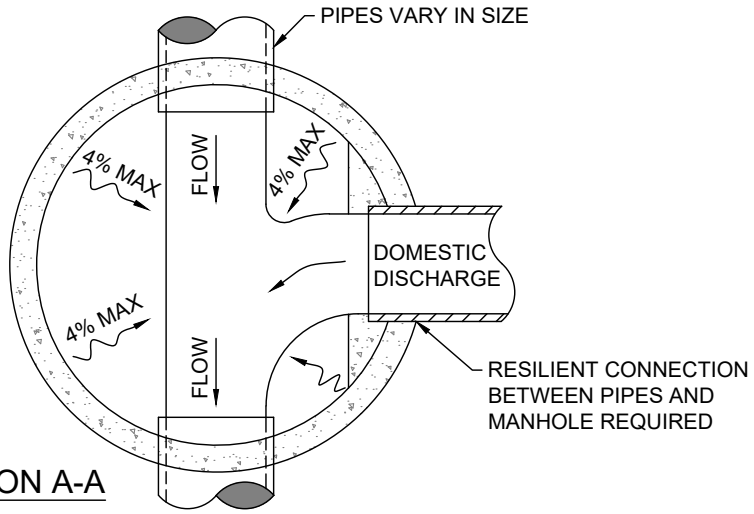


SECTION A-A

| | | | |
|---|---|---|---|
| PAYSON UTAH APRIL 2022 | PRECAST SANITARY SEWER MANHOLE | STANDARD PLAN SS-1 | SHEET 1 OF 2 |

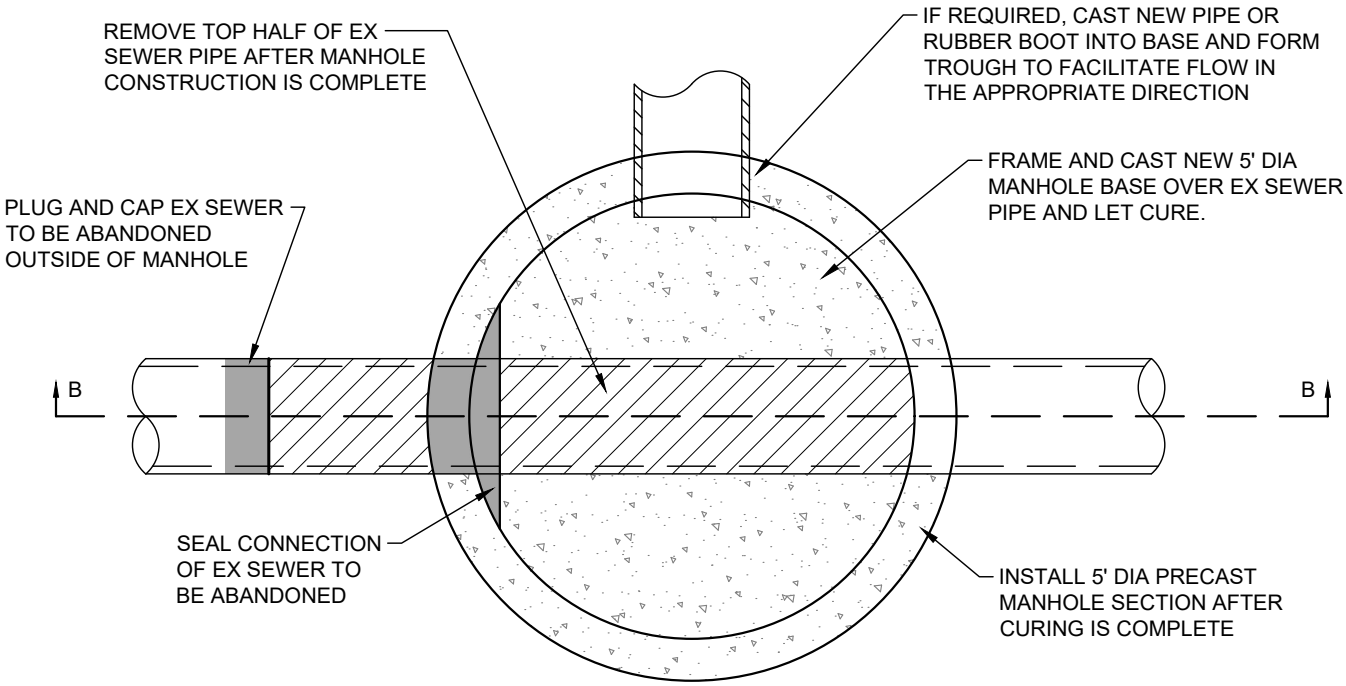


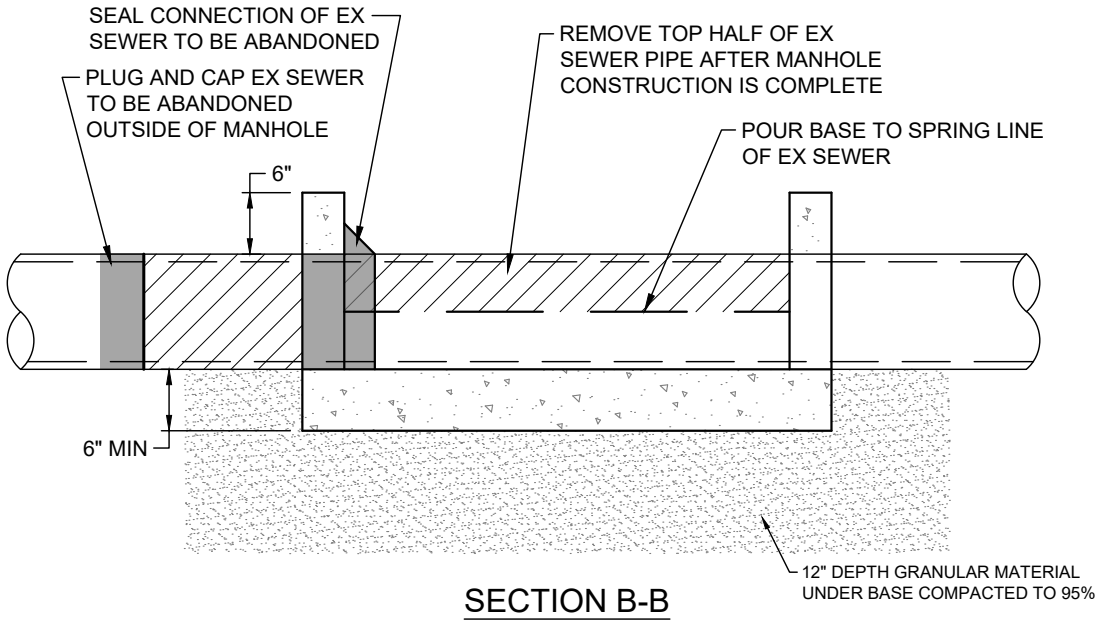


SECTION B-B

NOTES:

1. CAST-IN-PLACE MANHOLE BASE IS TO BE USED ONLY WHEN EXISTING SEWER IS TO REMAIN IN SERVICE DURING CONSTRUCTION AND A PORTION TO BE ABANDONED AFTER CONSTRUCTION IS COMPLETE.
2. ONLY BASE IS PERMITTED TO BE CAST-IN-PLACE. MANHOLE BARREL SECTIONS AND CONE TO BE PRECAST.
3. ALL PRECAST TO CONFORM TO ASTM C478.
4. REFER TO SHEET 1 FOR MANHOLE DETAIL.

| | | | |
|---|---|---|---|
| PAYSON UTAH<br>APRIL 2022 | PRECAST SANITARY SEWER MANHOLE<br>(WITH CAST-IN-PLACE BASE ON EXISTING SEWER) | STANDARD PLAN<br>SS-1 | SHEET<br>2 OF 2 |

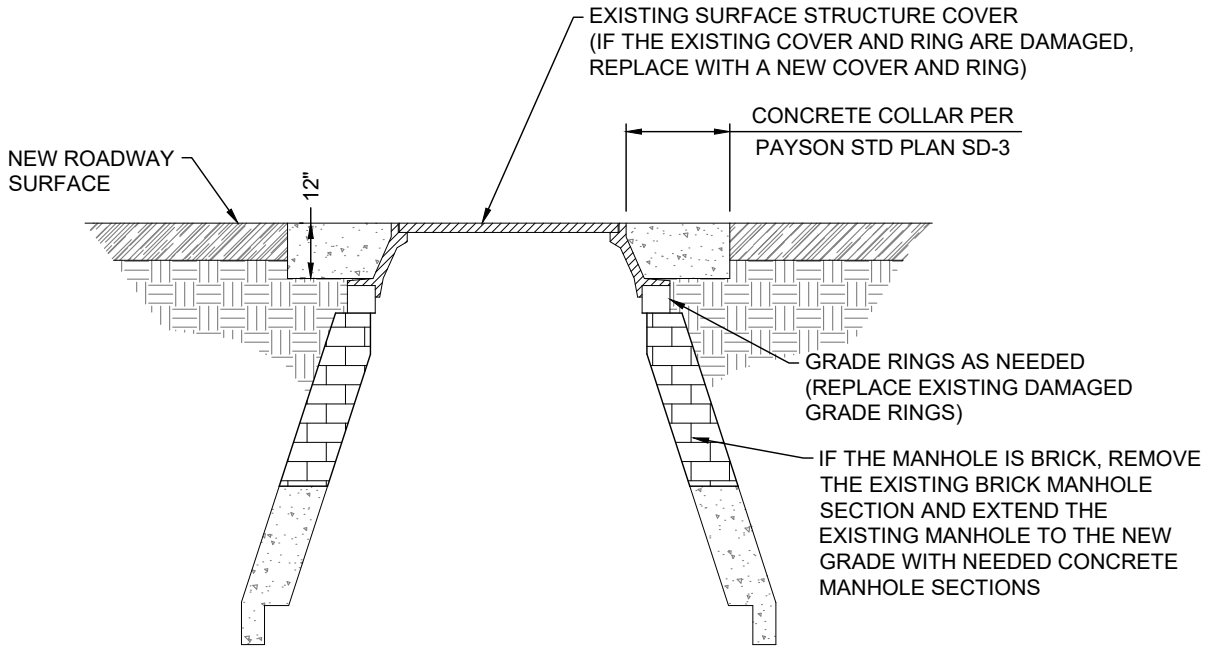


NOTES:

1. CONCRETE COLLARS PER PAYSON STANDARD PLAN SD-3.
2. SURFACE/COVERS/LIDS STRUCTURES SHALL BE BURIED NO MORE THAN 10 CONTINUOUS CALENDAR DAYS
3. KEEP LID 1/4" LOW WHEN LEVELING HARDWARE DURING COLLAR INSTALLATION
4. 12" MAX CONCRETE RISERS AND 3" MAX METAL GRADE RINGS ALLOWED
5. REVERSIBLE HARDWARE IS NOT ALLOWED

| | | | |
|---|---|---|---|
| PAYSON UTAH<br>APRIL 2022 | RECONSTRUCT BRICK MANHOLE | STANDARD PLAN<br>SS-2 | SHEET<br>1 OF 1 |

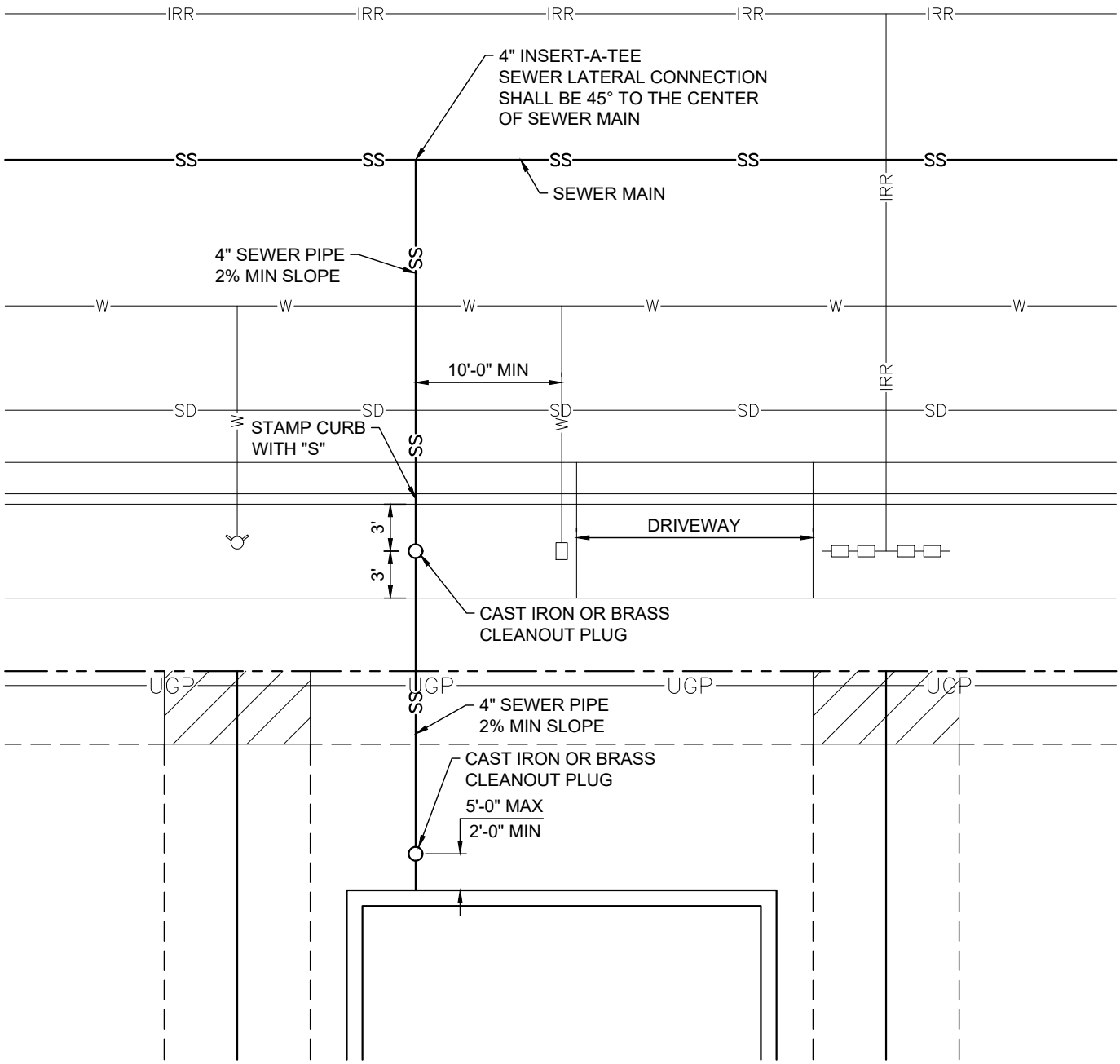


NOTES:

1. CLEANOUT REQUIRED EVERY 75-FT
2. NO HORIZONTAL BENDS PERMITTED IN SEWER SERVICE LATERAL
3. 45° MAX VERTICAL BEND
4. NO 90° VERTICAL BENDS PERMITTED IN SEWER SERVICE LATERAL

| PAYSON UTAH APRIL 2022 | SEWER LATERAL CONNECTION | STANDARD PLAN SS-3 | SHEET 1 OF 2 |
|---|---|---|---|

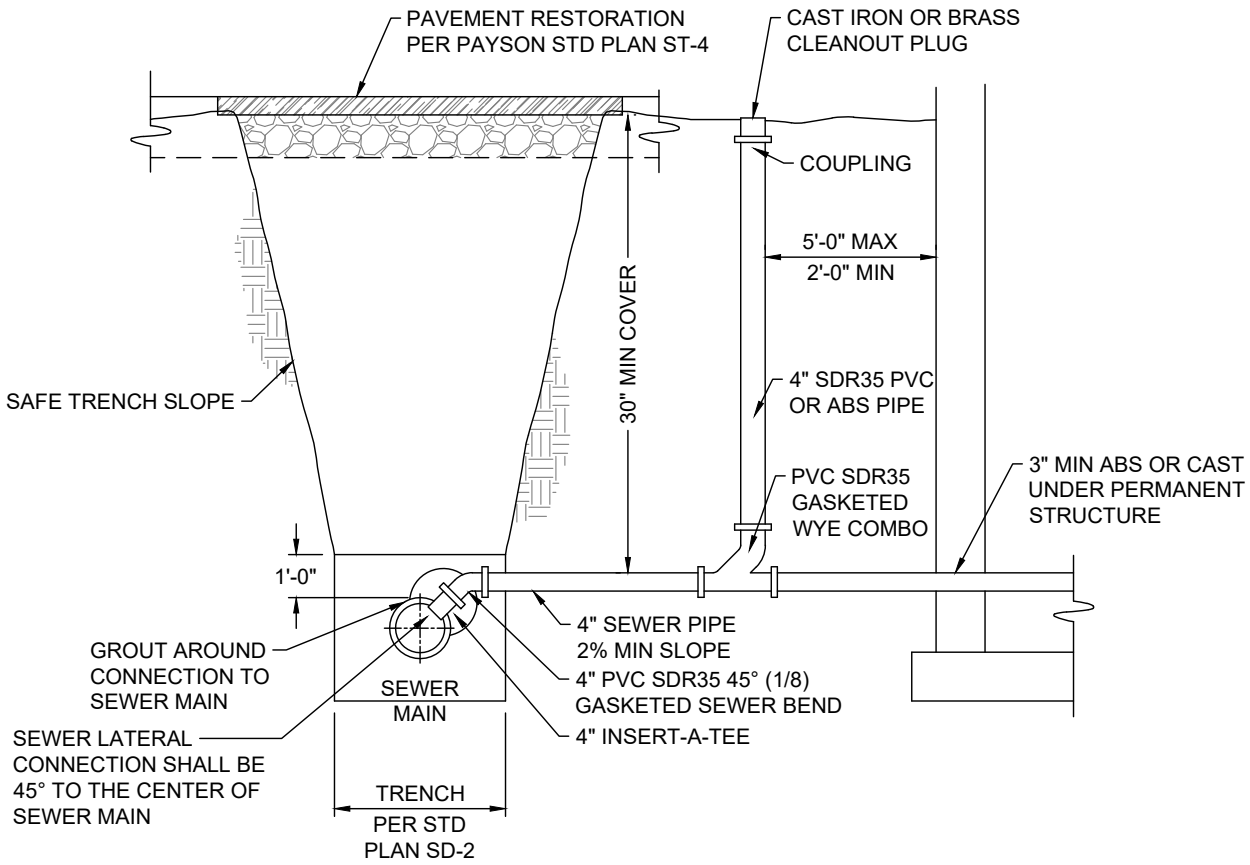


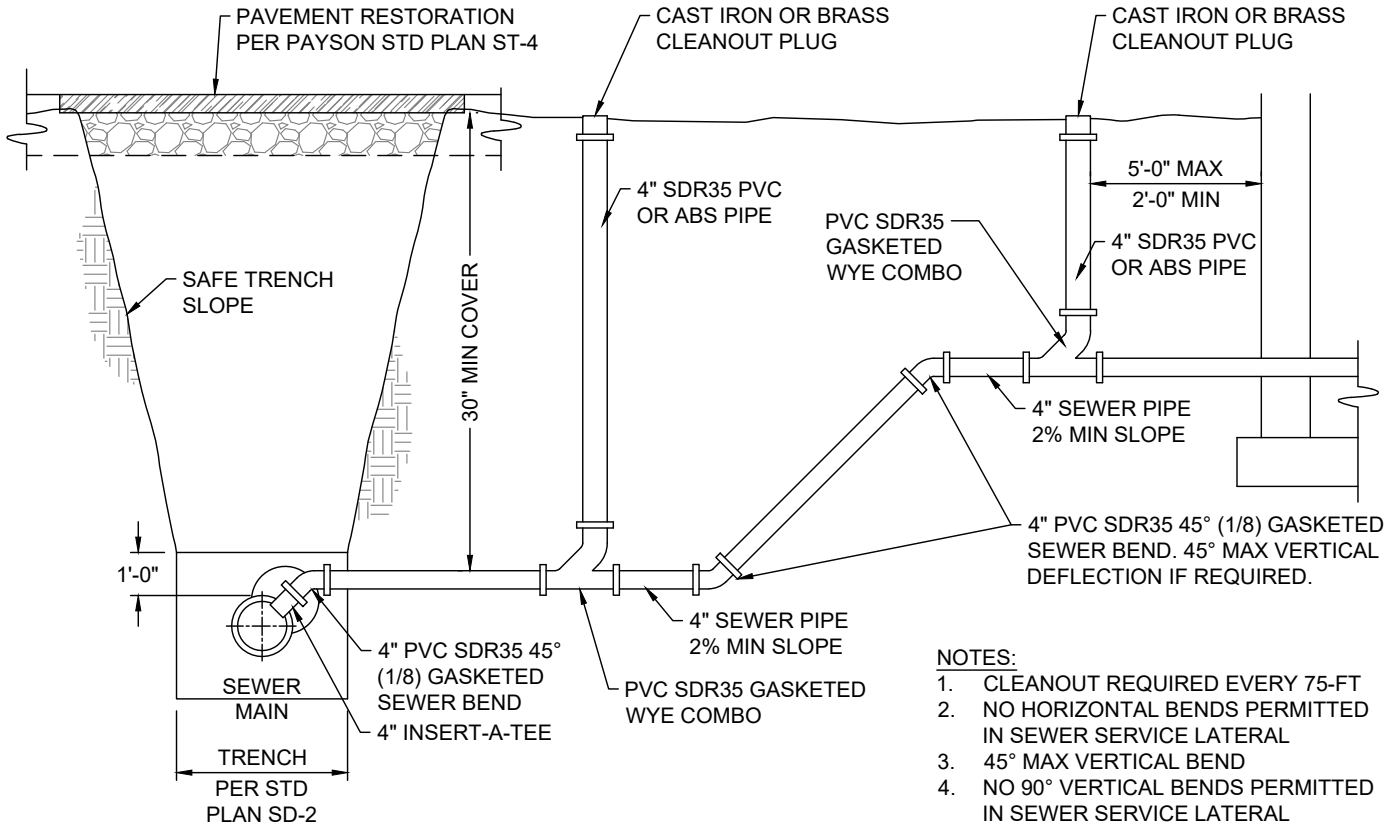


NOTES:

1. CLEANOUT REQUIRED EVERY 75-FT
2. NO HORIZONTAL BENDS PERMITTED IN SEWER SERVICE LATERAL
3. 45° MAX VERTICAL BEND
4. NO 90° VERTICAL BENDS PERMITTED IN SEWER SERVICE LATERAL

| | | | |
|---|---|---|---|
| PAYSON UTAH<br>APRIL 2022 | SEWER LATERAL CONNECTION | STANDARD PLAN<br>SS-3 | SHEET<br>2 OF 2 |

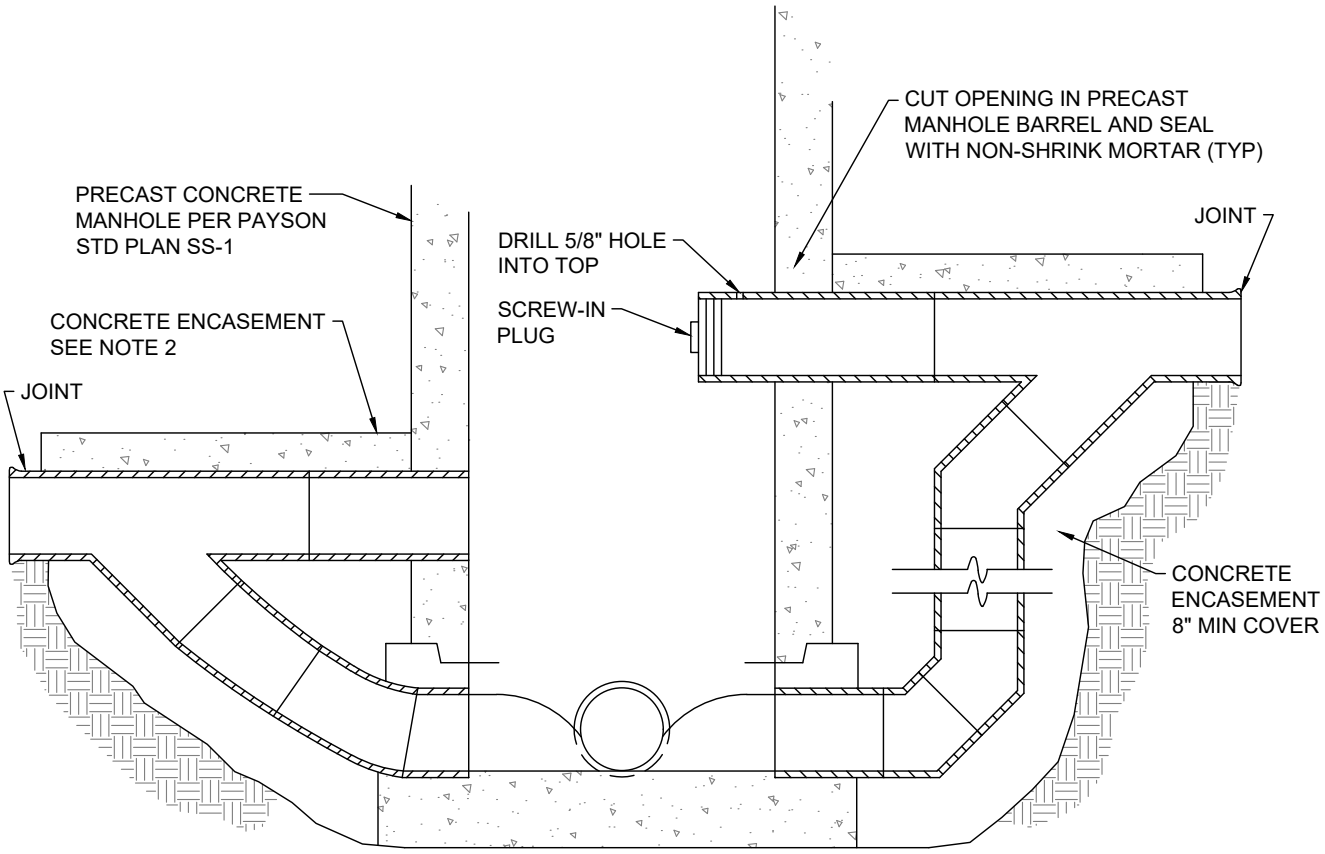


SHALLOW DROP

DEEP DROP

NOTES:

1. 2500 PSI CONCRETE PLACED AGAINST UNDISTURBED MATERIAL OR SHEETING
2. EXTEND ENCASEMENT TO FIRST JOINT BEYOND EXCAVATION FOR DROP CONNECTION
3. DROP PIPE TO BE SAME DIAMETER AS SEWER DISCHARGING INTO MANHOLE FOR SEWERS UP TO AND INCLUDING 12" DIAMETER

| PAYSON UTAH APRIL 2022 | DROP MANHOLE SECTION | STANDARD PLAN SS-4 | SHEET 1 OF 1 |
|---|---|---|---|

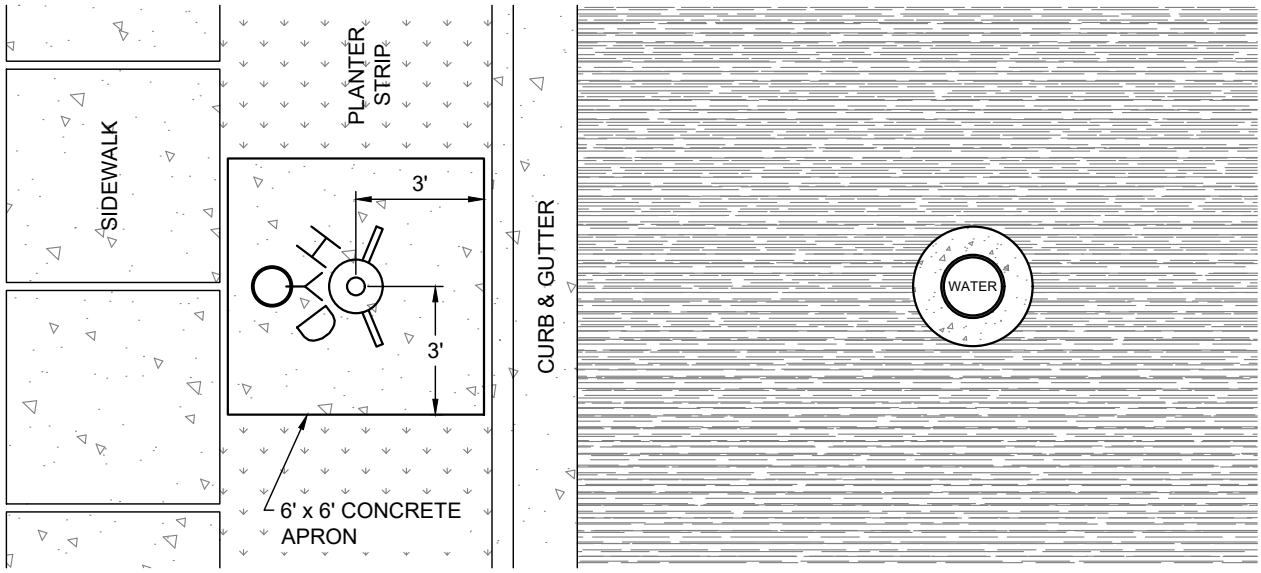


PLAN VIEW

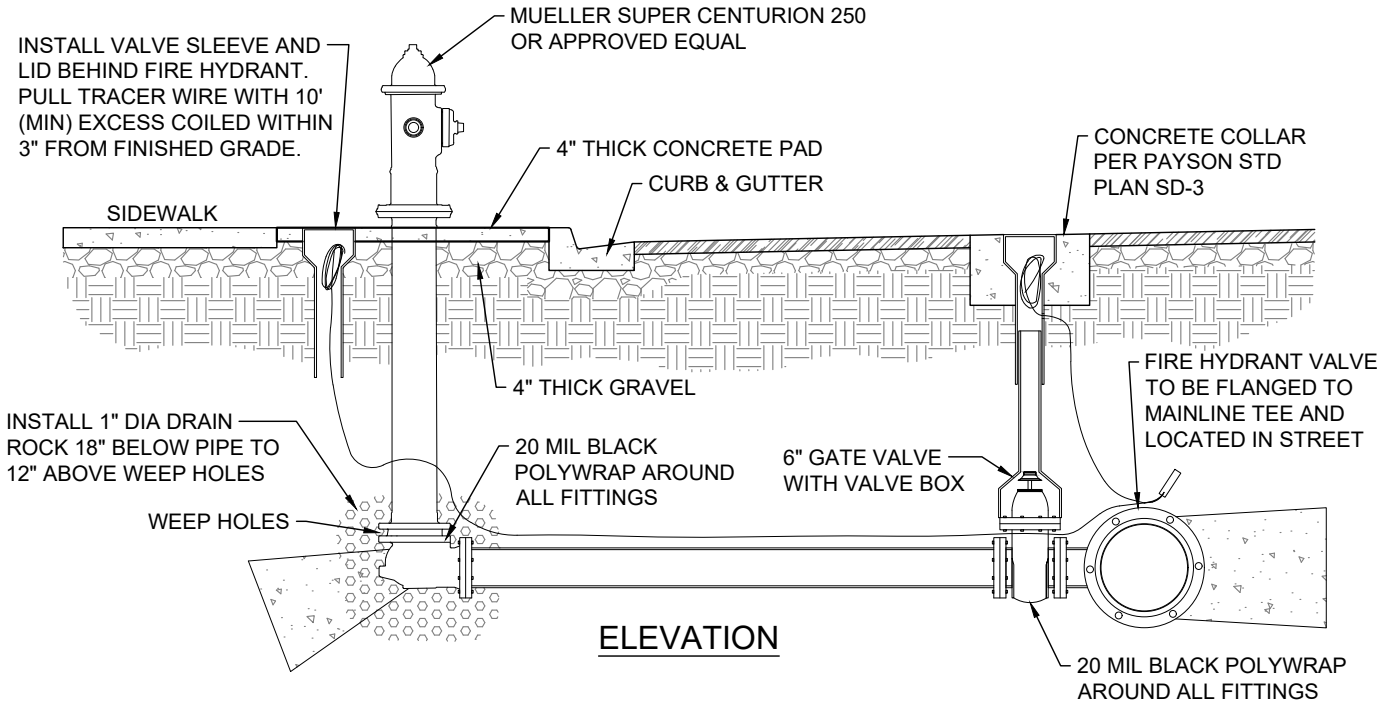


ELEVATION

NOTES:

1. LOCATE FIRE HYDRANT IN MIDDLE OF 6' x 6' CONCRETE APRON.
2. UNTREATED BASE COURSES: PROVIDE MATERIAL SPECIFIED IN APWA SECTION 32 11 23. DO NOT USE GRAVEL OR SEWER ROCK. PLACE PER APWA SECTION 32 05 10. COMPACT PER APWA SECTION 31 23 26 TO A MODIFIED PROCTOR DENSITY OF 95-PERCENT OR GREATER. MAXIMUM LOOSE LIFT THICKNESS IS 8-INCHES.
3. CONCRETE: CLASS 4000 PER APWA SECTION 03 30 04. PLACE PER APWA SECTION 32 16 13. CURE PER APWA SECTION 03 39 00.
   a. IF NECESSARY, PROVIDE CONCRETE THAT ACHIEVES DESIGN STRENGTH IN LESS THAN 7 DAYS. USE CAUTION, HOWEVER, AS SPIDER CRACKS DEVELOP IF AIR TEMPERATURE EXCEEDS 90°F.
   b. UNLESS SHOWN OTHERWISE, PROVIDE 1/2-INCH RADIUS IN CONCRETE EDGES EXPOSED TO PUBLIC VIEW.
4. EXPANSION JOINTS: FULL DEPTH 1/2-INCH THICK TYPE F1 JOINT FILLER MATERIAL PER APWA SECTION 32 16 13 MUST BE PLACED BETWEEN THE SIDEWALK AND THE APRON.
5. FINISH: FINE HAIR BROOM.
6. HYDRANT: INSTALL HYDRANT PER MANUFACTURER'S SPECIFICATIONS.
7. HYDRANT VALVE: INSTALL VALVE ON THE MAIN WITH A FLANGE CONNECTION TO TEE.

| PAYSON UTAH APRIL 2022 | FIRE HYDRANT LOCATION AND 6' x 6' APRON | STANDARD PLAN W-1 | SHEET 1 OF 1 |
|---|---|---|---|

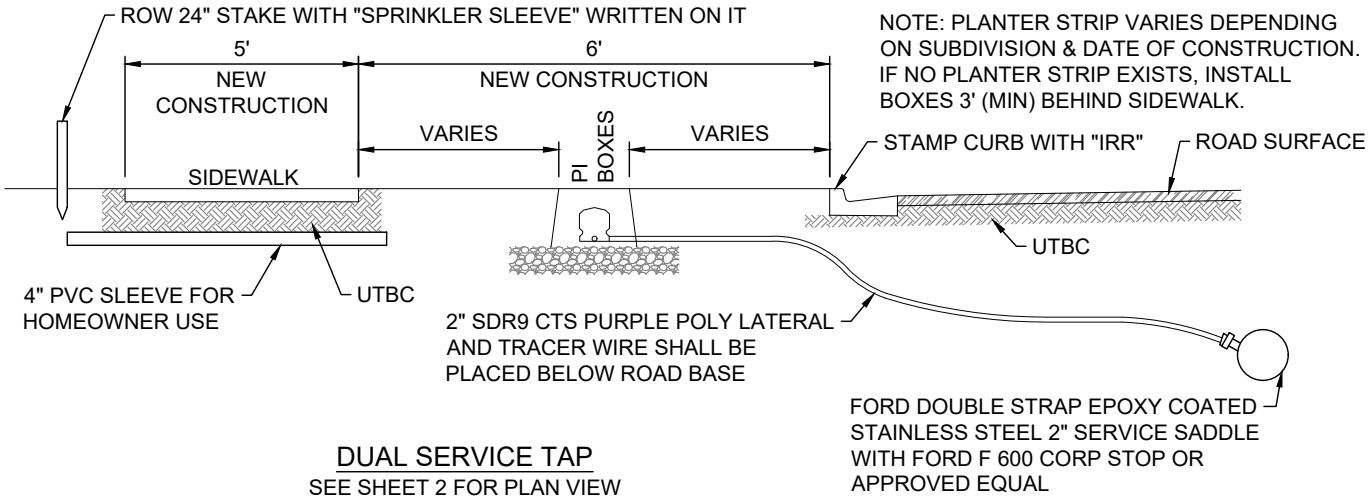


DUAL SERVICE TAP

SEE SHEET 2 FOR PLAN VIEW

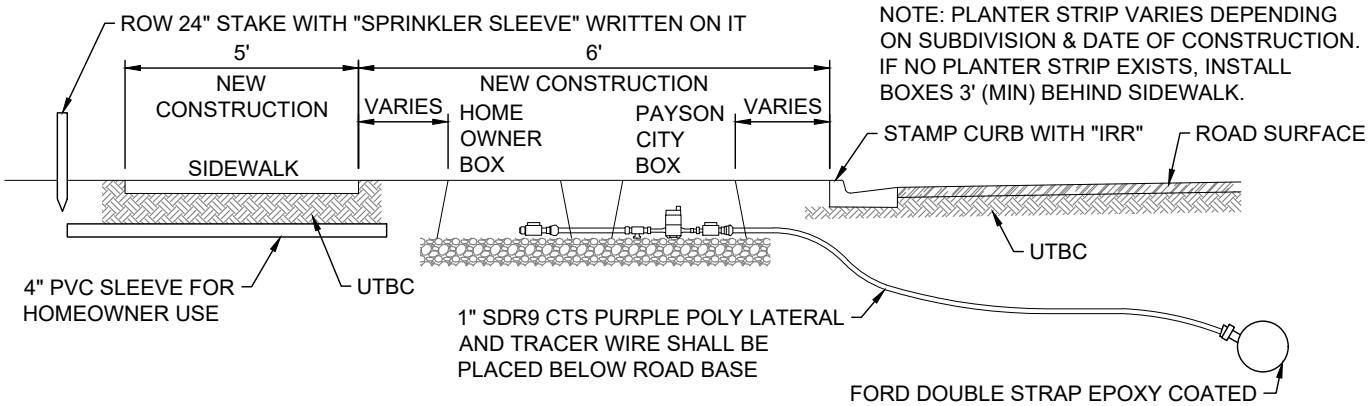


SINGLE SERVICE TAP

SEE SHEET 2 FOR PLAN VIEW

NOTES:

1. ALL MATERIALS TO BE BRASS AND SDR9 CTS POLY.
2. INSPECTION REQUIRED PRIOR TO BACKFILLING.
3. INSTALL ALL BACKFILL IN LIFTS NOT EXCEEDING 6" AFTER COMPACTION. COMPACT EACH LIFT TO AN AVERAGE DRY DENSITY OF 96% OF OPTIMUM WITH NO DENSITY TEST RESULT LESS THAN 92% OF OPTIMUM.
4. PLACE TAPS A MINIMUM OF 24" APART. USE A TAPPING TOOL WHICH IS SIZED CORRESPONDING TO THE SIZE OF THE SERVICE LINE TO BE INSTALLED. NO TAPS WITHIN 24" OF END OF PIPE.
5. A DOUBLE STRAP EPOXY COATED STAINLESS STEEL SERVICE SADDLE CLAMP AND TEFLON TAPE IS REQUIRED ON ALL TAPS.
6. INSTALL SERVICE LINE 12" BELOW FROST LINE OR 36" MINIMUM.
7. STANDARD SERVICE SIZE SHALL BE 2" FOR DUAL SERVICES AND 1" FOR SINGLE SERVICES.
8. STAINLESS STEEL LINER INSERTS REQUIRED INSIDE OF TUBING AT COMPRESSION FITTINGS.
9. ALL FITTINGS SHALL BE COMPATIBLE WITH SERVICE SIZE.
10. SERVICE LATERAL SHALL SLOPE TOWARDS PRESSURIZED IRRIGATION MAIN.
11. SPRINKLER SLEEVE SHALL NOT BE IN LINE WITH ANY UTILITY BOXES.
12. NO OTHER CONNECTIONS OR EQUIPMENT ARE PERMITTED BY CONTRACTOR OR HOME OWNER INSIDE PAYSON CITY BOX.
13. 3' MINIMUM OFFSET FROM DRIVEWAYS. **DO NOT ENCLOSE METER BOX IN CONCRETE.**
14. SEE W-2 SHEET 2 FOR PLAN VIEW LAYOUT.

| PAYSON UTAH APRIL 2022 | 1" PRESSURIZED IRRIGATION METER AND SERVICE | STANDARD PLAN W-2 | SHEET 1 OF 2 |
|---|---|---|---|

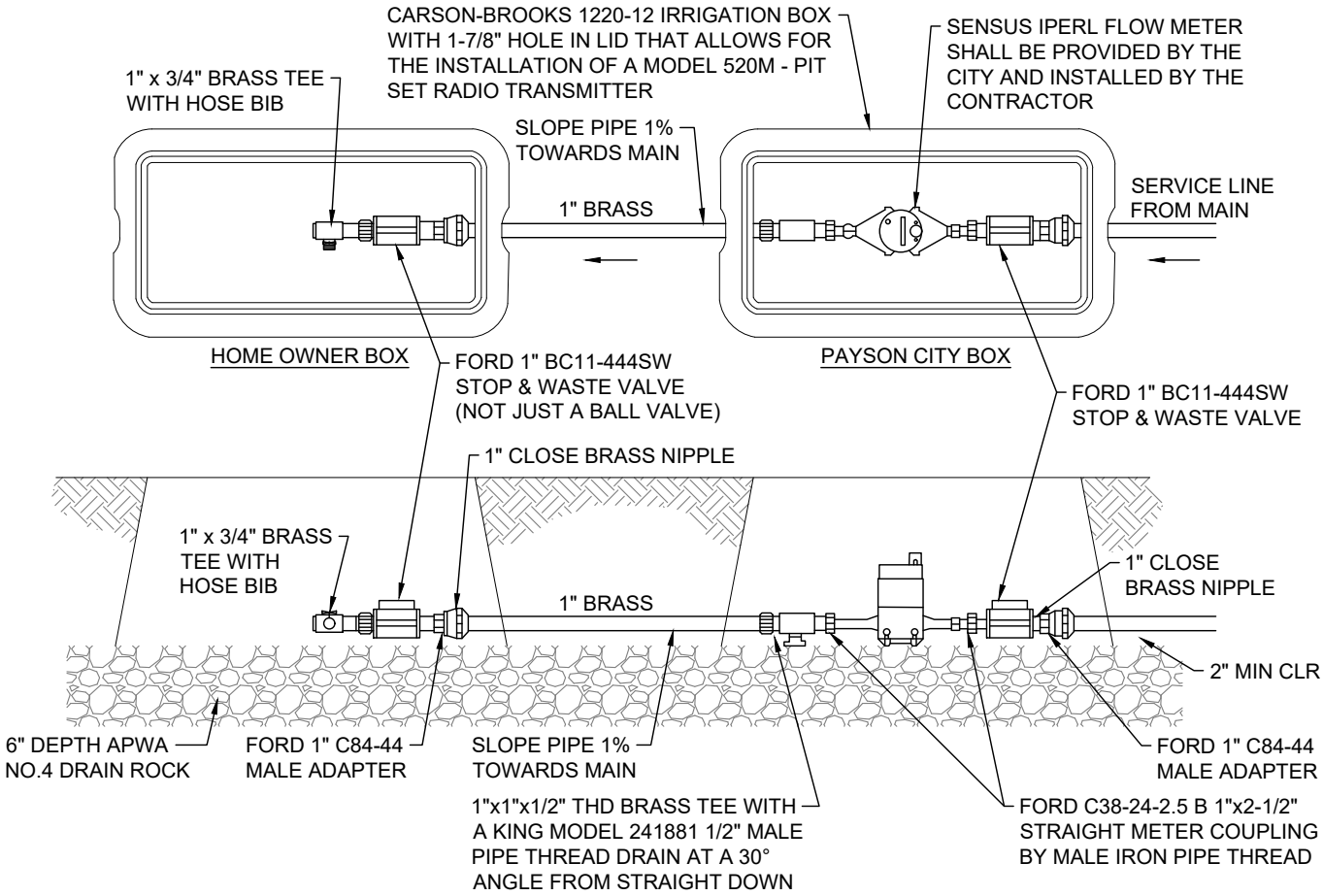


SERVICE METER CONFIGURATION

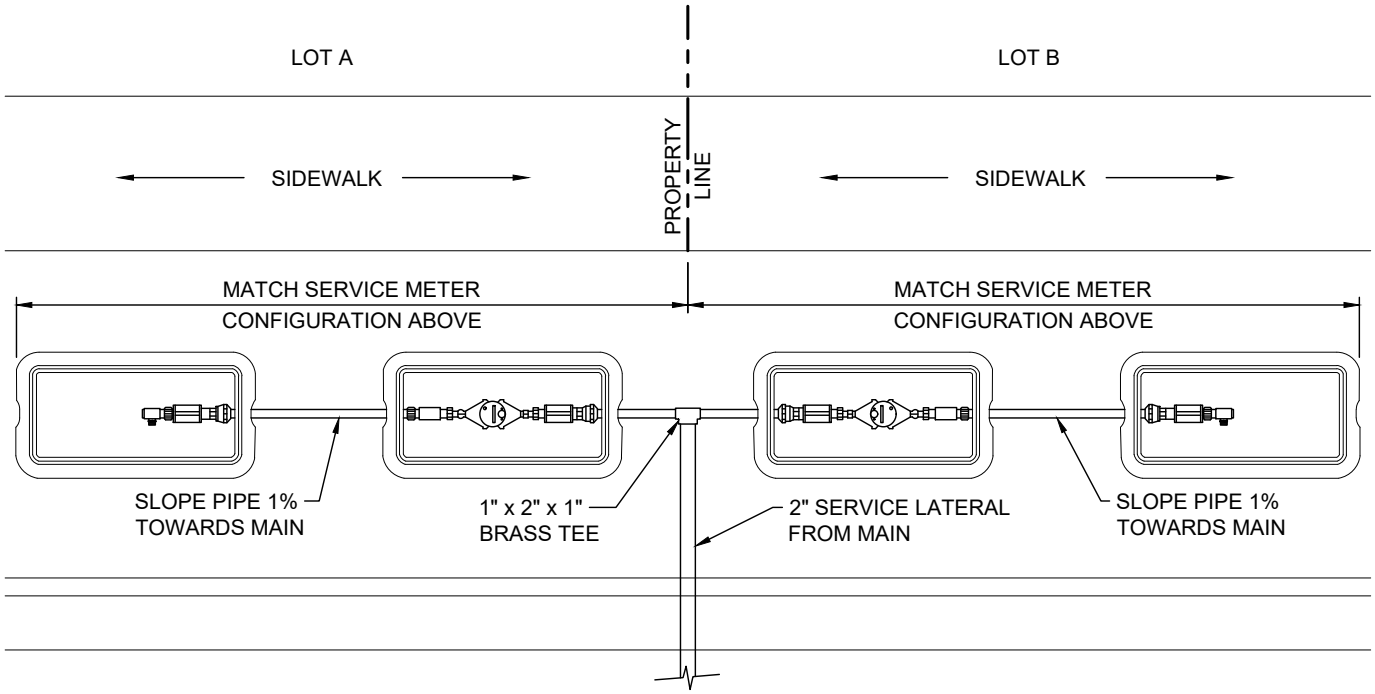


DUAL SERVICE LAYOUT

| | | | |
|---|---|---|---|
| PAYSON UTAH APRIL 2022 | 1" PRESSURIZED IRRIGATION METER AND SERVICE | STANDARD PLAN W-2 | SHEET 2 OF 2 |

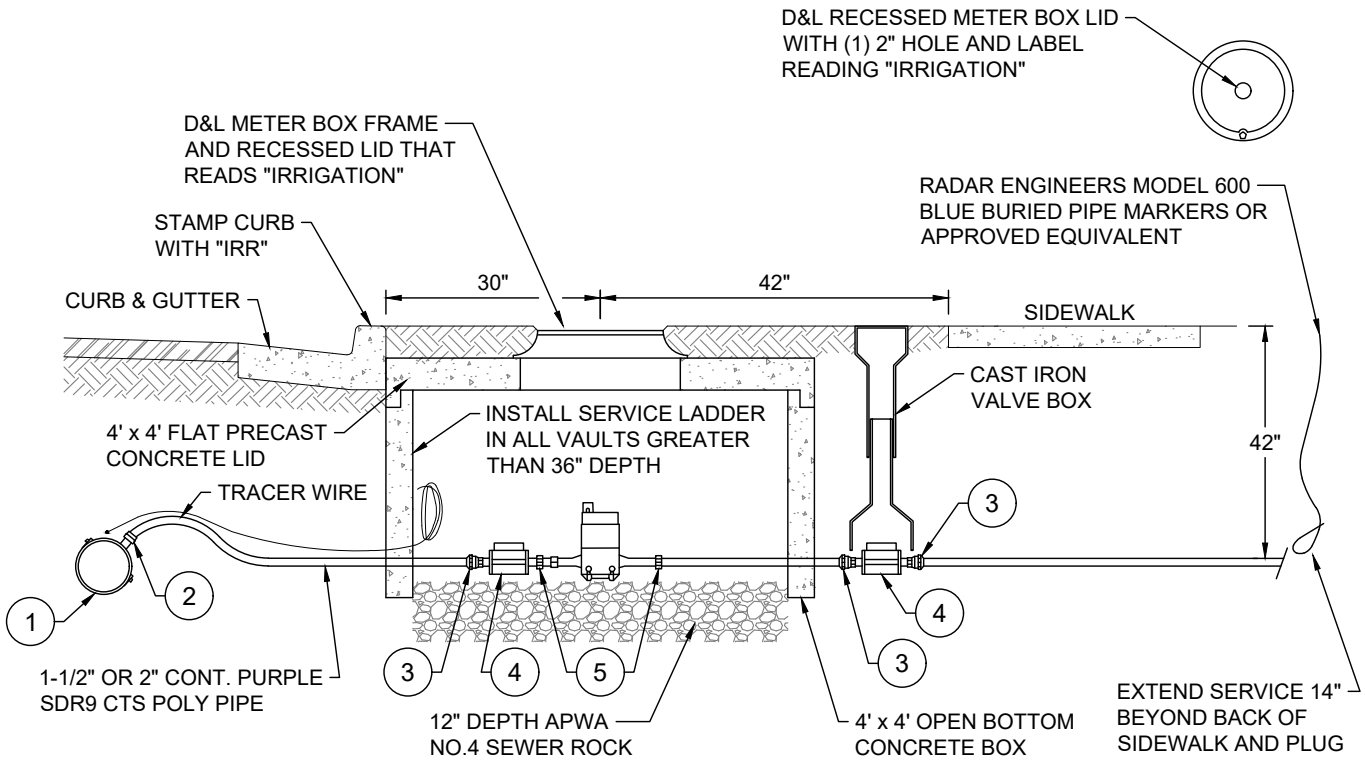


| FORD PART LIST | | | |
|---|---|---|---|
| NOTE # | DESCRIPTION | 1-1/2" PART # | 2" PART # |
| 1 | DOUBLE STRAP EPOXY COATED STAINLESS STEEL SERVICE SADDLE | F202-XXX-CC6 | F202-XXX-CC7 |
| 2 | CORP STOP | F600-6-G-NL | F600-7-G-NL |
| 3 | MALE ADAPTER | C84-66-Q-NL | C84-77-Q-NL |
| 4 | BALL VALVE WITH STOP AND WASTE | B44-666SW-Q-NL | B44-777SW-Q-NL |
| 5 | 2" x 2-1/2" STRAIGHT METER COUPLING x MALE IRON PIPE THREAD | C48-66-Q-NL | C48-77-Q-NL |

* USE ONLY FORD PARTS OR CITY ENGINEER APPROVED EQUIVALENTS

NOTES:

1. ALL MATERIALS TO BE BRASS AND SDR9 CTS POLY.
2. INSPECTION REQUIRED PRIOR TO BACKFILLING.
3. INSTALL ALL BACKFILL IN LIFTS NOT EXCEEDING 6" AFTER COMPACTION. COMPACT EACH LIFT TO AN AVERAGE DRY DENSITY OF 96% OF OPTIMUM WITH NO DENSITY TEST RESULT LESS THAN 92% OF OPTIMUM.
4. PLACE TAPS A MINIMUM OF 24" APART. USE A TAPPING TOOL WHICH IS SIZED CORRESPONDING TO THE SIZE OF THE SERVICE LINE TO BE INSTALLED. NO TAPS WITHIN 24" OF END OF PIPE.
5. A DOUBLE STRAP EPOXY COATED STAINLESS STEEL SERVICE SADDLE CLAMP AND TEFLON TAPE IS REQUIRED ON ALL TAPS.
6. INSTALL SERVICE LINE 12" BELOW FROST LINE OR 36" MINIMUM.
7. STAINLESS STEEL LINER INSERTS REQUIRED INSIDE OF TUBING AT COMPRESSION FITTINGS.
8. ALL FITTINGS SHALL BE COMPATIBLE WITH SERVICE SIZE.
9. SERVICE LATERAL SHALL SLOPE TOWARDS PRESSURIZED IRRIGATION MAIN.
10. SPRINKLER SLEEVE SHALL NOT BE IN LINE WITH ANY UTILITY BOXES.
11. NO OTHER CONNECTIONS OR EQUIPMENT ARE PERMITTED BY CONTRACTOR OR HOME OWNER INSIDE PAYSON CITY BOX.

| PAYSON UTAH APRIL 2022 | 1-1/2" AND 2" PI METER AND SERVICE | STANDARD PLAN W-3 | SHEET 1 OF 1 |
|---|---|---|---|

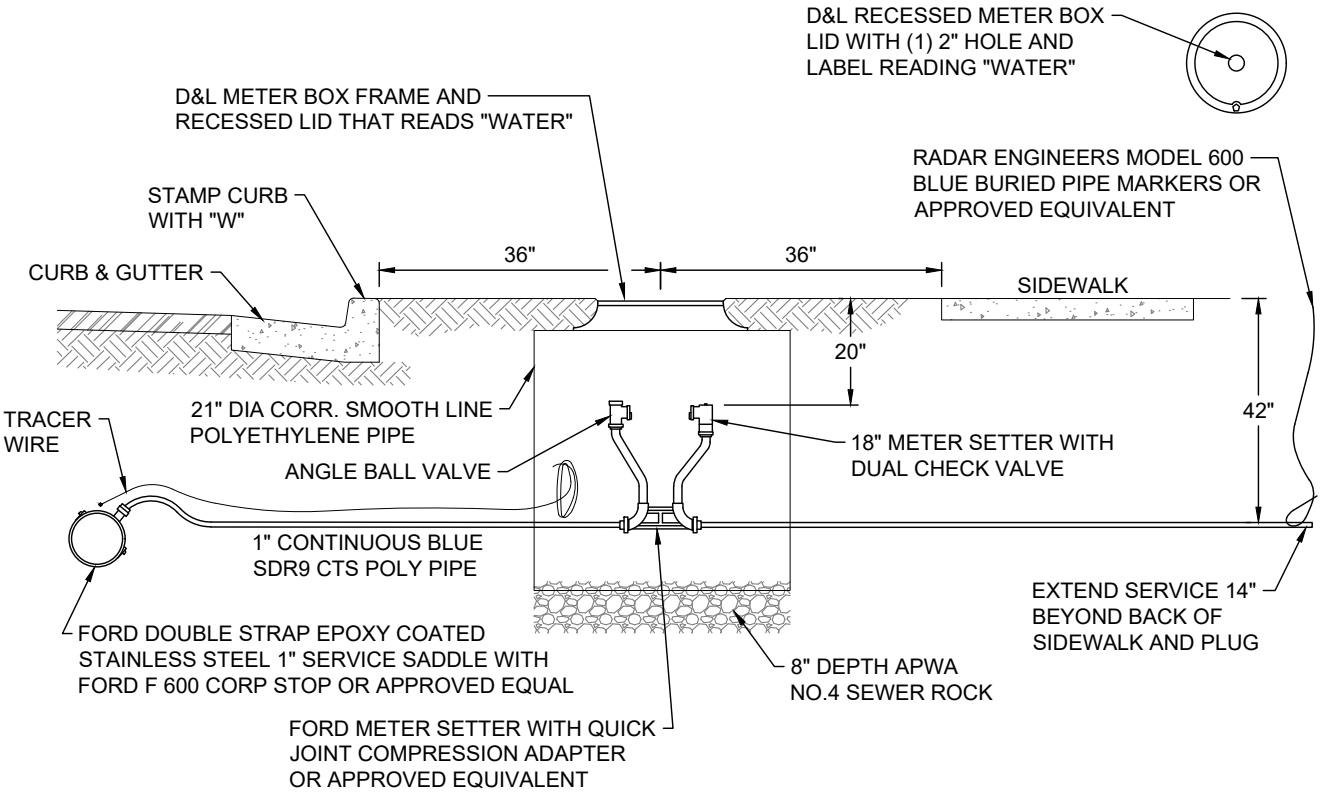


NOTES:

1. ALL MATERIALS TO BE BRASS AND SDR9 CTS POLY.
2. INSPECTION REQUIRED PRIOR TO BACKFILLING.
3. INSTALL ALL BACKFILL IN LIFTS NOT EXCEEDING 6" AFTER COMPACTION. COMPACT EACH LIFT TO AN AVERAGE DRY DENSITY OF 96% OF OPTIMUM WITH NO DENSITY TEST RESULT LESS THAN 92% OF OPTIMUM.
4. PLACE TAPS A MINIMUM OF 24" APART. USE A TAPPING TOOL WHICH IS SIZED CORRESPONDING TO THE SIZE OF THE SERVICE LINE TO BE INSTALLED. NO TAPS WITHIN 24" OF END OF PIPE.
5. A DOUBLE STRAP EPOXY COATED STAINLESS STEEL SERVICE SADDLE CLAMP AND TEFLON TAPE IS REQUIRED ON ALL TAPS.
6. INSTALL SERVICE LINE 12" BELOW FROST LINE OR 42" MINIMUM.
7. STANDARD SERVICE SIZE IS 1".
8. STAINLESS STEEL LINER INSERTS REQUIRED INSIDE OF TUBING AT COMPRESSION FITTINGS.
9. ALL FITTINGS SHALL BE COMPATIBLE WITH SERVICE SIZE.
10. 3' MINIMUM OFFSET FROM DRIVEWAYS. **DO NOT ENCLOSE METER BOX IN CONCRETE.**

| | | | |
|---|---|---|---|
| PAYSON UTAH<br>APRIL 2022 | 1" DRINKING WATER METER AND SERVICE | STANDARD PLAN<br>W-4 | SHEET<br>1 OF 1 |

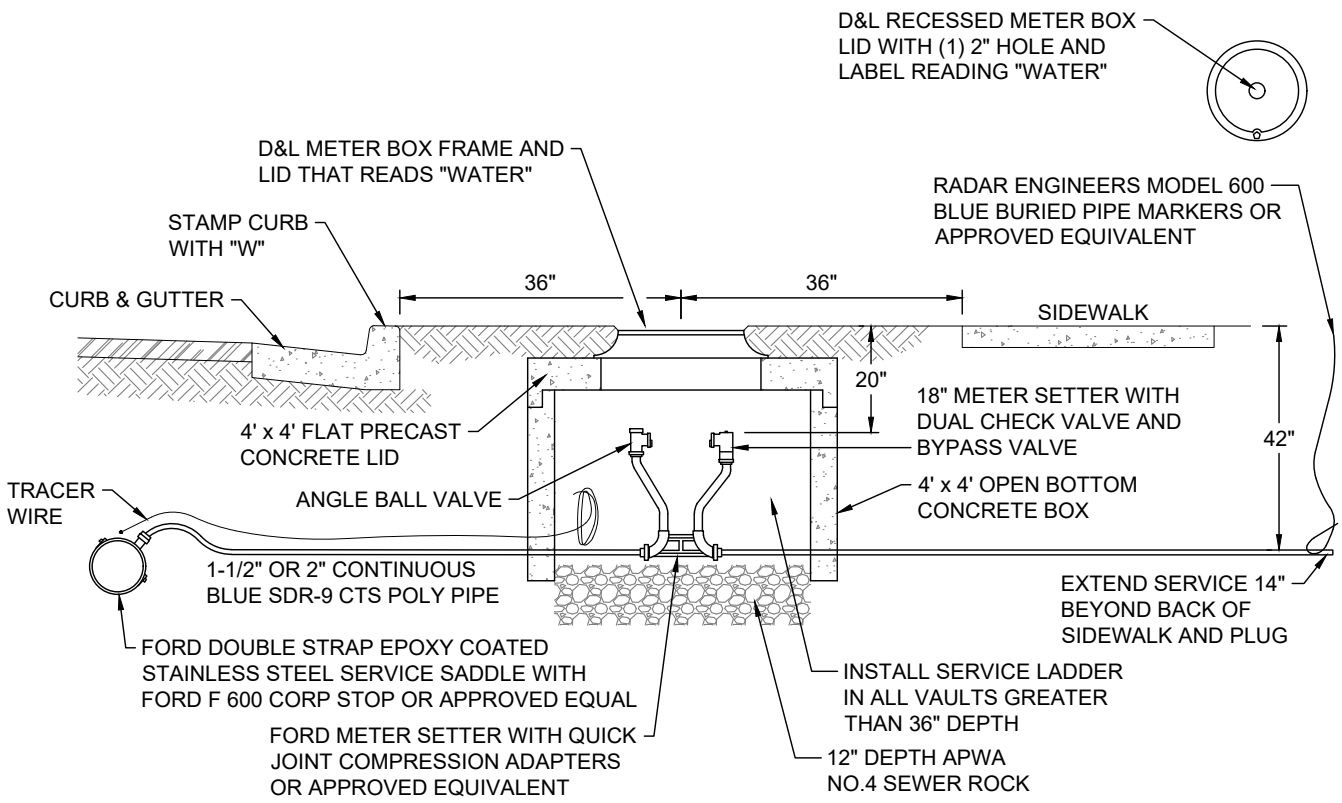


NOTES:

1. ALL MATERIALS TO BE BRASS AND SDR9 CTS POLY.
2. INSPECTION REQUIRED PRIOR TO BACKFILLING.
3. INSTALL ALL BACKFILL IN LIFTS NOT EXCEEDING 6" AFTER COMPACTION. COMPACT EACH LIFT TO AN AVERAGE DRY DENSITY OF 96% OF OPTIMUM WITH NO DENSITY TEST RESULT LESS THAN 92% OF OPTIMUM.
4. PLACE TAPS A MINIMUM OF 24" APART. USE A TAPPING TOOL WHICH IS SIZED CORRESPONDING TO THE SIZE OF THE SERVICE LINE TO BE INSTALLED. NO TAPS WITHIN 24" OF END OF PIPE.
5. A DOUBLE STRAP EPOXY COATED STAINLESS STEEL SERVICE SADDLE CLAMP AND TEFLON TAPE IS REQUIRED ON ALL TAPS.
6. INSTALL SERVICE LINE 12" BELOW FROST LINE OR 42" MINIMUM.
7. STAINLESS STEEL LINER INSERTS REQUIRED INSIDE OF TUBING AT COMPRESSION FITTINGS.
8. ALL FITTINGS SHALL BE COMPATIBLE WITH SERVICE SIZE.
9. 3' MINIMUM OFFSET FROM DRIVEWAYS. **DO NOT ENCLOSE METER BOX IN CONCRETE.**

| | | | |
|---|---|---|---|
| PAYSON UTAH<br>APRIL 2022 | 1-1/2" AND 2" DRINKING WATER METER AND SERVICE | STANDARD PLAN<br>W-5 | SHEET<br>1 OF 1 |

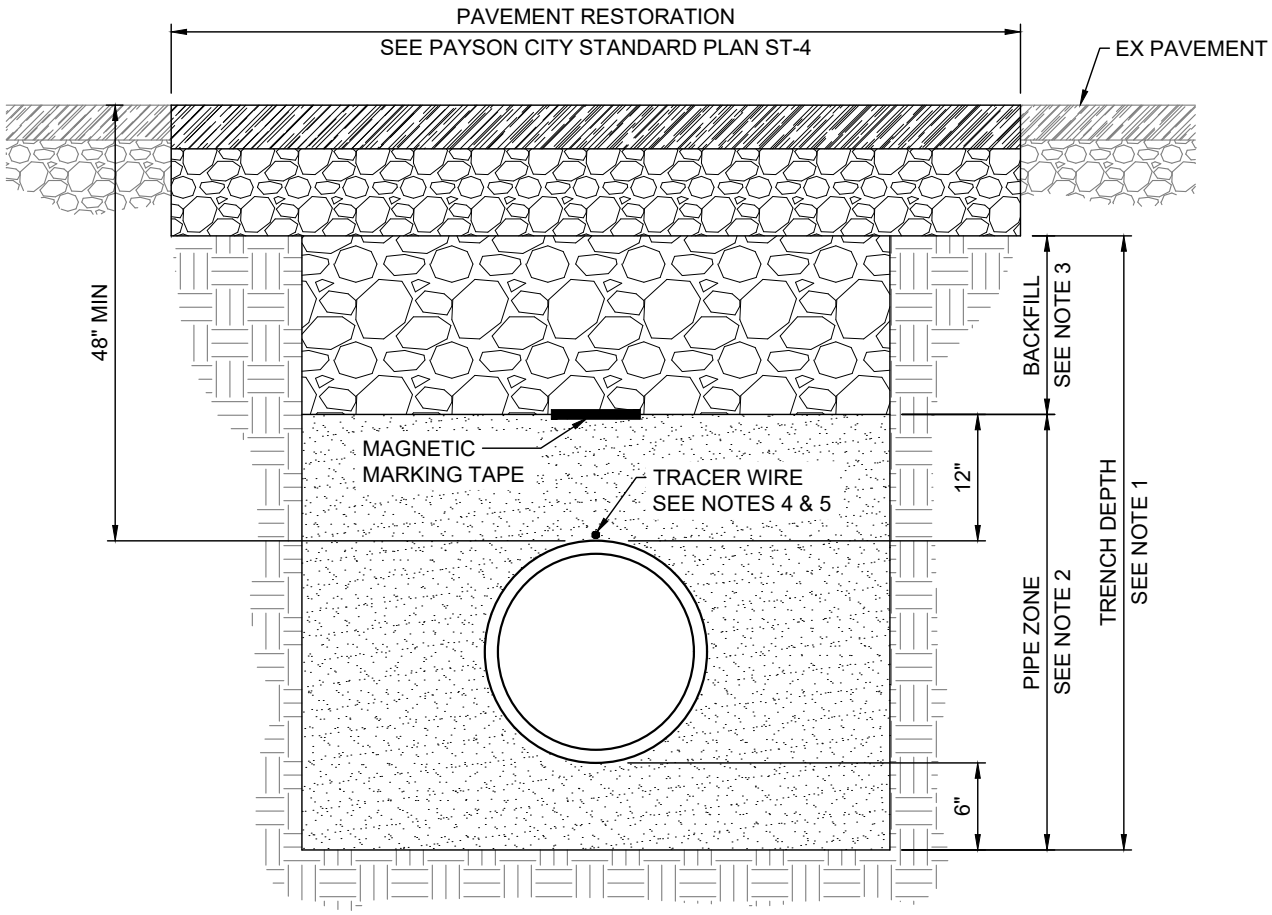


SECTION

NOTES:

1. IF DEPTH OF TRENCH IS GREATER THAN 4-FT AND SHORES OR TRENCH SUPPORTS ARE NOT USED, SLOPES ARE REQUIRED PER OSHA REGULATIONS. REFER TO APWA PLAN 381 FOR ADDITIONAL INFORMATION.
2. PIPE ZONE: SAND (TYPE IV MATERIAL) PER APWA SECTION 31 05 13. COMPACT TO 92% DENSITY PER ASTM D-1557.
3. BACKFILL: A-1-A OR NATIVE MATERIAL (UPON APPROVAL) PER APWA SECTION 31 05 13. MATERIAL MUST MEET APWA STANDARD FOR GRANULAR BORROW. COMPACT TO 96% DENSITY PER ASTM D-1557. CONTRACTOR MUST SUBMIT GRADATION AND PROCTOR DENSITY DATA OF NATIVE MATERIAL TO BE CONSIDERED FOR BACKFILL. ALL NATIVE MATERIAL TO BE USED AS FILL MUST HAVE ALL ORGANIC MATERIAL, RUBBISH, DEBRIS, AND OTHER OBJECTIONABLE MATERIALS REMOVED.
4. USE 12 GAUGE (MIN) SINGLE STRAND COATED TRACER WIRE. AVOID SPLICING CONNECTION OF TRACER WIRE IF POSSIBLE. WHEN SPLICING IS NEEDED USE GREASE FILLED NUT AND WRAP WITH TAPE. TAPE TRACER WIRE TO PIPE BELLS. CONTINUITY TO BE TESTED AND APPROVED PRIOR TO FINAL ACCEPTANCE.
5. TRACER WIRE AT VALVES SHALL BE BROUGHT NEAR SURFACE ON THE OUTSIDE OF VALVE BOX. NOTCH A HOLE ON THE UPPER SLEEVE AND FEED TRACER WIRE INTO VALVE BOX.

WATER LINE INSTALLATION:

6. HOT TAPS ARE NOT PERMITTED WITHOUT WRITTEN APPROVAL FROM THE CITY ENGINEER.
7. NOTIFY PAYSON CITY PUBLIC WORKS 48 HOURS PRIOR TO MAKING CONNECTION TO ANY EXISTING WATER LINES. SHUT DOWN NOTICES TO ALL AFFECTED CONNECTIONS MUST BE SENT A MINIMUM OF 48 HOURS BEFORE SHUT DOWN. SHUT DOWN MAY NOT LAST FOR MORE THAN 12 HOURS.
8. INSTALL VALVES ON EACH LEG OF A MAIN LINE JUNCTION. USE FLANGED CONNECTIONS FOR VALVES ON NEW FITTINGS. WHEN CONNECTING TO AN EXISTING FITTING, USE MECHANICAL JOINTS AND SET NEW VALVE 5-FT FROM EXISTING FITTING. JOINT RESTRAINTS (EBAA MEGALUG OR APPROVED EQUAL) ARE REQUIRED ON ALL MECHANICAL JOINT CONNECTIONS.
9. REQUIRED VALVE SPACING IS ONE BLOCK OR 20 SERVICE CONNECTIONS, WHICHEVER IS LESS.

| PAYSON UTAH<br>APRIL 2022 | WATER MAIN PIPE TRENCH | STANDARD PLAN<br>W-6 | SHEET<br>1 OF 1 |
|---|---|---|---|

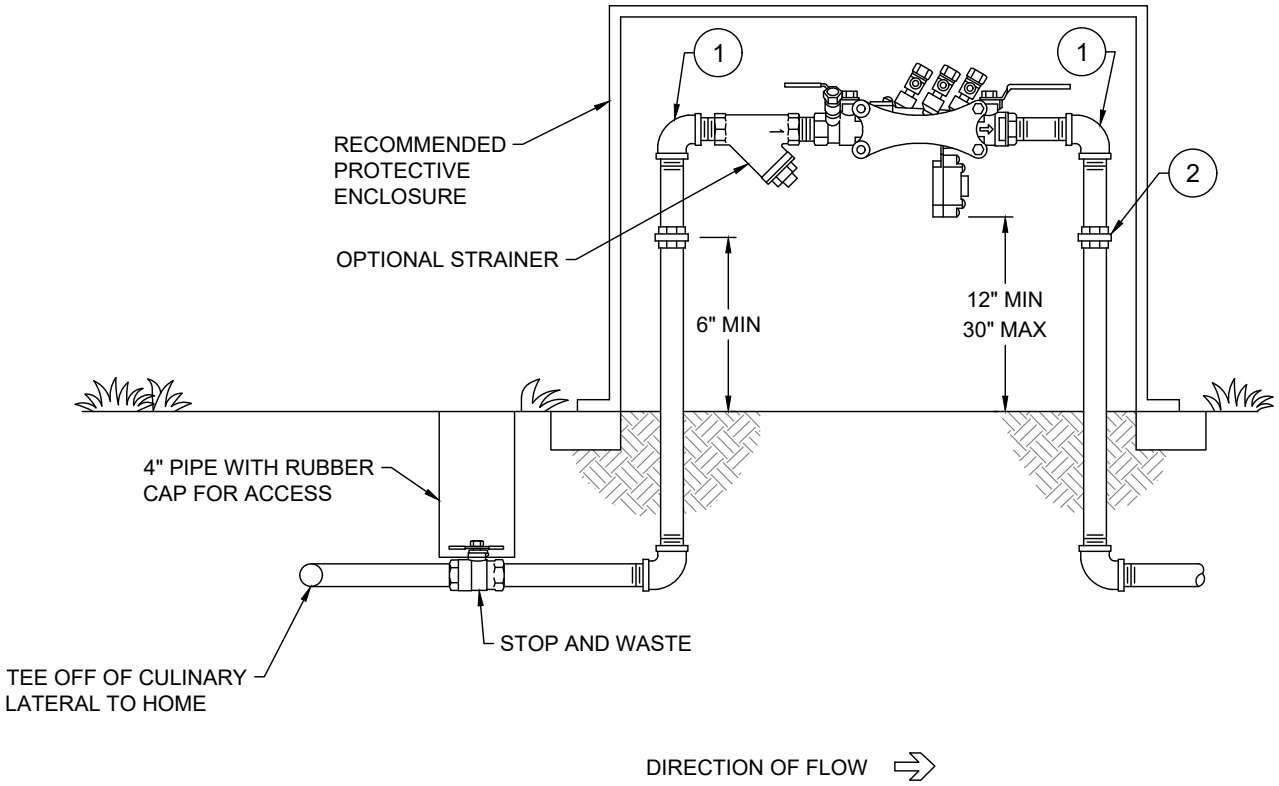


OUTDOOR INSTALLATION

NOTES:

1. 90° ELBOW BRASS/COPPER 1" THRU 3"
2. PIPE UNION BRASS/COPPER
3. BACKFLOW ASSEMBLY SHALL BE REVIEWED AND APPROVED BY PAYSON CITY. ZURN BRAND OR APPROVED EQUIVALENT.
4. ALL PIPE FITTINGS TO BE TYPE K HARD COPPER
5. ALL TEST COCKS - 4 REQUIRED - SHALL BE FITTED WITH BRASS PLUGS AND INSTALLED WITH TEFLON TAPE
6. COMPRESSION TYPE FITTINGS ARE NOT ALLOWED
7. INSTALL THE BACKFLOW PREVENTION ASSEMBLY IMMEDIATELY DOWNSTREAM OF THE AGENCY WATER METER
8. CALL FOR UNDERGROUND INSPECTION BEFORE BACKFILLING
9. THE ENTIRE ASSEMBLY AND EVERYTHING AFTER THE CULINARY METER IS THE RESPONSIBILITY OF THE HOME OWNER TO MAINTAIN AND THE YEARLY TESTING ON ASSEMBLY.

| | | | |
|---|---|---|---|
| PAYSON UTAH<br>APRIL 2022 | BACKFLOW PREVENTION ASSEMBLY<br>1" THRU 3" PIPE SIZES | STANDARD PLAN<br>W-7 | SHEET<br>1 OF 1 |